ATTESTATION OF CONFORMITY

Attestation No. 22AE090794E001

The submitted sample of below equipment has been tested in according to Electromagnetic Compatibility Directive 2014/30/EU with the following standards. The test report(s) show that the product complies with standard(s) recognized as giving presumption of compliance with the principal protection requirement of the EC Council Directive of 2014/30/EU.

Report No.	:	E01A22090794E00101
Applicant	:	Ledlenser Corporation Ltd.
Address	:	No.25, Yudong 1 Road, Dongcheng Town, Yangdong District, Yangjiang City, GD, 529931, China.
Manufacturer	:	Ledlenser Corporation Ltd.
Address	:	No.25, Yudong 1 Road, Dongcheng Town, Yangdong District, Yangjiang City, GD, 529931, China.
Description of Product	:	Work light
Model No.	:	W4R Work (502733RWL0)
Trade Mark	:	LEDLENSER
Input Rating	:	Charger: DC 5V Discharger: Battery 3.7V 760mAh 2.812Wh
Test Standards	:	EN IEC 55015:2019 + A11:2020 EN 61547:2009

After preparation of the necessary technical documentation as well as the EU declaration of conformity, the CE marking as below can be affixed on the product if all relevant effective EU-directives or regulations related to CE marking have been complied with. The EU declaration of conformity is issued under the sole responsibility of the applicant or manufacturer.

Test Laboratory

.....

Tiger Xu
EMC Supervisor
Date of Issue: Oct. 25, 2022

This attestation of conformity is based on a single evaluation of the submitted sample(s) of the above mentioned product. It does not imply an assessment of the production of the products.

Dongguan Anci Electronic Technology Co., Ltd.
Add.: 1-2 Floor, Building A, No.11, Headquarters 2 Road, Songshan Lake
Hi-tech Industrial Development Zone, Dongguan City, Guangdong Pr., China.
Web: www.gtggroup.com E-mail: info@gtggroup.com Tel:86-4007558988

EMC TEST REPORT

For Electromagnetic Interference of

Report Reference No. ..... :	E01A22090794E00101
Prepared by (name + signature) ..... :	Dyson Dai
Reviewed by (name + signature) ..... :	Duke Liu
Approved by (name + signature) ..... :	Tiger Xu
Date of Receipt of EUT ..... :	Sep. 30, 2022
Date of Test ..... :	Oct. 08, 2022 to Oct. 09, 2022
Date of issue ..... :	Oct. 25, 2022
Testing Laboratory ..... :	Dong Guan Anci Electronic Technology Co., Ltd
Laboratory address ..... :	1-2 Floor, Building A, No.11, Headquarters 2 Road, Songshan Lake Hi-tech Industrial Development Zone, Dongguan City, Guangdong Pr., China.
Testing location ..... :	EMC Laboratory
Applicant's name..... :	Ledlenser Corporation Ltd.
Address ..... :	No.25, Yudong 1 Road, Dongcheng Town, Yangdong District, Yangjiang City, GD, 529931, China.
Manufacturer ..... :	Ledlenser Corporation Ltd.
Address ..... :	No.25, Yudong 1 Road, Dongcheng Town, Yangdong District, Yangjiang City, GD, 529931, China.
First Factory's name……..:	Ledlenser Corporation Ltd.
Address……..……:	No.25, Yudong 1 Road, Dongcheng Town, Yangdong District, Yangjiang City, GD, 529931, China.

Test specification:

EUT description. ..... :	Work light
Trade Mark..... :	LEDLENSER
Model/Type reference. ..... :	W4R Work (502733RWL0)
Test Sample. ..... :	W4R Work (502733RWL0)
Input Ratings..... :	Charger: DC 5V Discharger: Battery 3.7V 760mAh 2.812Wh
Standards..... :	EN IEC 55015:2019 + A11:2020 EN 61547:2009

The device described above was tested by Dong Guan Anci Electronic Technology Co., Ltd. to determine the maximum emission levels emanated from the device and severity levels of the device endure and its performance criterion. The measurement results are contained in this test report and Dong Guan Anci Electronic Technology Co., Ltd. assumes full responsibility for the accuracy and completeness of these measurements. This report shows the EUT is technically compliance with the above official standards.

This report applies to the above sample only and shall not be reproduced in part without written approval of Dong Guan Anci Electronic Technology Co., Ltd.

Table of Contents **Page**

1 . **GENERAL INFORMATION** 6
1.1 PRODUCT INFORMATION 6
1.2 MODIFIED INFORMATION 6
1.3 DETAILS ABOUT THE TEST LABORATORY 6
2 . **SUMMARY OF TEST RESULTS** 8
2.1 MEASUREMENT UNCERTAINTY 9
2.2 DESCRIPTION OF TEST MODES 9
2.3 BLOCK DIGRAM SHOWING THE CONFIGURATION OF SYSTEM TESTED 10
3 . **EMISSION TEST** 11
3.1 CONDUCTED DISTURBANCE AT MAINS TERMINALS 11
3.1.1 LIMIT OF CONDUCTED EMISSION(MAINS PORT) 11
3.1.2 MEASUREMENT INSTRUMENTS LIST 11
3.1.3 TEST PROCEDURE 12
3.1.4 DEVIATION FROM TEST STANDARD 12
3.1.5 TEST SETUP 12
3.1.6 EUT OPERATING CONDITIONS 12
3.1.7 TEST RESULTS 12
3.2 WIRED NETWORK INTERFACES AND LOCAL WIRED PORTS OTHER THAN POWER SUPPLY 13
3.2.1 WIRED NETWORK INTERFACES OTHER THAN POWER SUPPLY 13
3.2.2 DISTURBANCE VOLTAGE LIMITS AT THE LOCAL WIRED PORTS 13
3.2.3 MEASUREMENT INSTRUMENTS LIST 14
3.2.4 TEST PROCEDURE 14
3.2.5 TEST SETUP 15
3.2.6 EUT OPERATING CONDITIONS 15
3.2.7 TEST RESULTS 15
3.3 RADIATED DISTURBANCE (30MHz to 1000MHz) 16
3.3.1 LIMITS OF RADIATED EMISSION MEASUREMENT 16
3.3.2 MEASUREMENT INSTRUMENTS LIST 16
3.3.3 TEST PROCEDURE 17
3.3.4 DEVIATION FROM TEST STANDARD 17
3.3.5 TEST SETUP 18
3.3.6 EUT OPERATING CONDITIONS 18
3.3.7 TEST RESULTS 19
3.4 MAGNETIC EMISSION MEASUREMENT (9KHz to 30MHz) 26
3.4.1 MEASUREMENT INSTRUMENTS LIST 26
3.4.2 LIMITS OF MAGNETIC EMISSION MEASUREMENT 26
3.4.3 LARGE LOOP ANTENNA SETUP DIAGRAM 27
3.4.4 OPERATING CONDITIONS OF THE EUT 28
3.4.5 MAGNETIC EMISSION DATA 28

Table of Contents **Page**

3.4.6 TEST RESULTS 29
3.5 HARMONICS CURRENT MEASUREMENT 36
3.5.1 LIMITS OF HARMONICS CURRENT MEASUREMENT 36
3.5.2 MEASUREMENT INSTRUMENTS LIST 37
3.5.3 TEST PROCEDURE 37
3.5.4 DEVIATION FROM TEST STANDARD 37
3.5.5 TEST SETUP 37
3.5.6 EUT OPERATING CONDITIONS 37
3.6.1 LIMITS OF VOLTAGE FLUCTUATION AND FLICKSMEASUREMENT 39
3.6.2 MEASUREMENT INSTRUMENTS LIST 39
3.6.3 TEST PROCEDURE 39
3.6.4 DEVIATION FROM TEST STANDARD 39
3.6.5 TEST SETUP 40
3.6.6 EUT OPERATING CONDITIONS 40
3.6.7 TEST RESULTS 40
4 **. EMC IMMUNITY TEST** 41
4.1 STANDARD COMPLIANCE/SERVRITY LEVEL/CRITERIA 41
4.2 GENERAL PERFORMANCE CRITERIA 42
4.3 GENERAL PERFORMANCE CRITERIA TEST SETUP 42
4.4 ESD TESTING 43
4.4.1 TEST SPECIFICATION 43
4.4.2 MEASUREMENT INSTRUMENTS 43
4.4.3 TEST PROCEDURE 43
4.4.4 DEVIATION FROM TEST STANDARD 43
4.4.5 TEST SETUP 44
4.4.6 TEST RESULTS 45
4.5 RS TESTING 46
4.5.1 TEST SPECIFICATION 46
4.5.2 MEASUREMENT INSTRUMENTS 46
4.5.3 TEST PROCEDURE 46
4.5.4 DEVIATION FROM TEST STANDARD 46
4.5.5 TEST SETUP 47
4.5.6 TEST RESULTS 48
4.6 EFT/BURST TESTING 49
4.6.1 TEST SPECIFICATION 49
4.6.2 MEASUREMENT INSTRUMENTS 49
4.6.3 TEST PROCEDURE 49
4.6.4 DEVIATION FROM TEST STANDARD 49
4.6.5 TEST SETUP 50
4.6.6 TEST RESULTS 51
4.7 SURGE TESTING 52
4.7.1 TEST SPECIFICATION 52

Table of Contents **Page**

4.7.2 MEASUREMENT INSTRUMENTS 52
4.7.3 TEST PROCEDURE 52
4.7.4 DEVIATION FROM TEST STANDARD 53
4.7.5 TEST SETUP 53
4.7.6 TEST RESULTS 54
4.8 INJECTION CURRENT TESTING 55
4.8.1 TEST SPECIFICATION 55
4.8.2 MEASUREMENT INSTRUMENTS 55
4.8.3 TEST PROCEDURE 55
4.8.4 DEVIATION FROM TEST STANDARD 55
4.8.5 TEST SETUP 56
4.8.6 TEST RESULTS 57
4.9 VOLTAGE INTERRUPTION/DIPS TESTING 58
4.9.1 TEST SPECIFICATION 58
4.9.2 MEASUREMENT INSTRUMENTS 58
4.9.3 TEST PROCEDURE 58
4.9.4 DEVIATION FROM TEST STANDARD 58
4.9.5 TEST SETUP 59
4.9.6 TEST RESULTS 59
4.10 POWER-FREQUENCY MAGNETIC FILDS 60
4.10.1 MEASUREMENT INSTRUMENTS 60
4.10.2 TEST LEVEL AND PERFORMANCE CRITERION 60
4.10.3 TEST PROCEDURE 60
4.10.4 DEVIATION FROM TEST STANDARD 60
4.10.5 TEST SETUP 61
4.10.6 TEST RESULTS 61
5. ATTACHMENT 62
5.1 EUT TEST PHOTO 62
5.2 EUT PHOTO 64

1. GENERAL INFORMATION

1.1 PRODUCT INFORMATION

1. This device is a Work light, used for lighting equipment.
2. This test report only reflects the worst data of the test mode.
3. All tests was performed on model W4R Work (502733RWL0).
4. The EUT passed the test.

1.2 MODIFIED INFORMATION

Version	Summary	Revision Date	Report No.
Ver.1.0	Original Report	/	E01A22090794E00101

1.3 DETAILS ABOUT THE TEST LABORATORY

Test Location: 1

Company name: Dongguan Anci Electronic Technology Co., Ltd.

Address: 1-2 Floor, Building A, No.11, Headquarters 2 Road, Songshan Lake Hi-tech Industrial Development Zone, Dongguan City, Guangdong Pr., China.

Telephone: +86-769- 8507 5888

Fax: +86-769- 8507 5898

Test Location: 2

Company name: Guangdong Dongguan Quality Supervision Testing Center

Address: No.2 South Industry Road, Dongguan Songshan Lake Sci.&Tech. Industrial Park, Guangdong Province, China

Telephone: +86 769 2307 1111

Fax: +86 769 2307 7221

Standard	Test Item	Test Site
EN IEC 55015:2019 + A11:2020	Conducted Disturbance at the electric power supply interface	N/A
	Conducted Disturbance at wired network interfaces other than power supply	N/A
	Conducted Disturbance at local wired ports other than electrical power supply interface	N/A
	Radiated Disturbance (30MHz to 1GHz)	1
	Magnetic Disturbance (9KHz to 30MHz)	1
EN IEC 61000-3-2:2019 + A1:2021	Harmonic Current Emission	N/A
EN 61000-3-3:2013+A1:2019+A2:2021	Voltage Fluctuations & Flicker	N/A
EN 61000-4-2:2009	Electrostatic Discharge	1
EN 61000-4-3:2006 +A1:2008+A2: 2010	RF electromagnetic field	2
EN 61000-4-4:2012	Fast transients	N/A
EN 61000-4-5:2014	Surges	N/A
EN 61000-4-6:2014	Injected Current	N/A
EN 61000-4-8:2010	Power Frequency Magnetic Field	N/A
EN 61000-4-11:2004	Volt. Interruptions Volt. Dips	N/A

2. SUMMARY OF TEST RESULTS

Test procedures according to the technical standards:

Emission				
Standard	Test Item	Clause	Judgment	Remark
EN IEC 55015:2019 + A11:2020	Conducted Disturbance at the electric power supply interface	4.3.1	N/A	
	Conducted Disturbance at wired network interfaces other than power supply	4.3.2	N/A	
	Conducted Disturbance at local wired ports other than electrical power supply interface	4.4	N/A	
	Radiated Disturbance (30MHz to 1GHz)	4.5.3	PASS	
	Magnetic Disturbance (9KHz to 30MHz)	4.5.2	PASS	
EN 61000-3-2:2019 + A1:2021	Harmonic Current Emission	7	N/A	
EN 61000-3-3:2013+A1:2019+A2:2021	Voltage Fluctuations & Flicker	5	N/A	
Immunity (EN 61547:2009)				
Section	Test Item	Clause	Judgment	Performance Criteria
EN 61000-4-2:2009	Electrostatic Discharge	5.2	PASS	B
EN 61000-4-3:2006 +A1:2008+A1:2010	RF electromagnetic field	5.3	PASS	A
EN 61000-4-4:2012	Fast transients	5.4	N/A	B
EN 61000-4-5:2014	Surges	5.5	N/A	C
EN 61000-4-6:2014	Injected Current	5.6	N/A	A
EN 61000-4-8:2010	Power Frequency Magnetic Field	5.7	N/A	A
EN 61000-4-11:2004	Volt. Interruptions Volt. Dips	5.8	N/A	C / B

NOTE:

(1)" N/A" denotes test is not applicable in this Test Report

2.1 MEASUREMENT UNCERTAINTY

The reported uncertainty of measurement **y** ± **U**，where expended uncertainty **U** is based on a standard uncertainty multiplied by a coverage factor of **k=2**，providing a level of confidence of approximately **95** %。

A. Conducted Measurement:

Test Site	Method	Measurement Frequency Range	U，(dB)	NOTE
Test Site 1	ANSI	9 KHz ~ 30MHz	3.19	

B. Conducted Disturbance at Control Terminals:

Test Site	Method	Measurement Frequency Range	U，(dB)	NOTE
Test Site 2	ANSI	9 KHz ~ 30MHz	3.19	

C. Magnetic Disturbance (9KHz to 30MHz):

Test Site	Method	Measurement Frequency Range	U，(dB)	NOTE
Test Site 1	ANSI	9KHz ~ 30MHz	2.54	

D. Radiated Disturbance (30MHz to 1GHz):

Test Site	Method	Measurement Frequency Range	Ant. H / V	U，(dB)	NOTE
Test Site 1	ANSI	30MHz ~ 200MHz	V	3.69	
		30MHz ~ 200MHz	H	3.69	
		200MHz ~ 1,000MHz	V	3.67	
		200MHz ~ 1,000MHz	H	3.67	

2.2 DESCRIPTION OF TEST MODES

To investigate the maximum EMI emission characteristics generates from EUT, the test system was pre-scanning tested base on the consideration of following EUT operation mode or test configuration mode which possible have effect on EMI emission level. Each of these EUT operation mode(s) or test configuration mode(s) mentioned above was evaluated respectively.

Pre-scan mode	
Mode 1	Charging
Mode 2	Max Lighting
Mode 3	Min Lighting

Final-scan mode	
Mode 1	Charging
Mode 2	Max Lighting
Mode 3	Min Lighting

2.3 BLOCK DIGRAM SHOWING THE CONFIGURATION OF SYSTEM TESTED

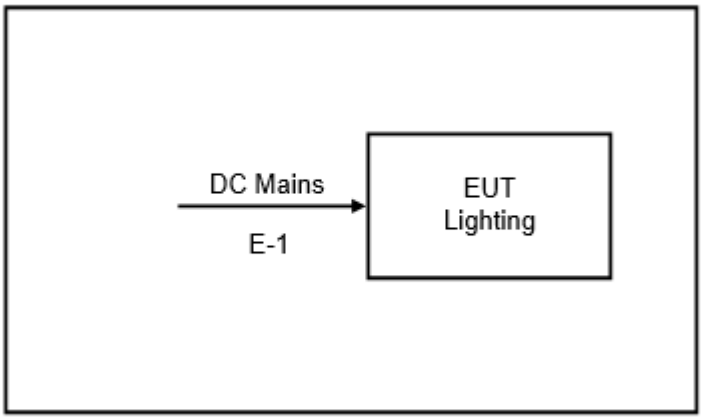

The EUT has been tested as an independent unit together with other necessary accessories or support units. The following support units or accessories were used to form a representative test configuration during the tests.

Item	Type of cable	Length
E-1	DC Mains	< 1m

Item	product name	model number
DC Mains	charger	Fly Macro Adapter

3. EMISSION TEST

3.1 CONDUCTED DISTURBANCE AT MAINS TERMINALS

3.1.1 LIMIT OF CONDUCTED EMISSION(MAINS PORT) (Frequency Range 9KHz-30MHz)

FREQUENCY (MHz)	(dBuV)	
	Quasi-peak	Average
0.009-0.05	110	--
0.05-0.15	90-80	--
0.15 -0.5	66 - 56 *	56 - 46 *
0.50 -5.0	56.00	46.00
5.0 -30.0	60.00	50.00

Note:

(1) The tighter limit applies at the band edges.

(2) The limit of " * " marked band means the limitation decreases linearly with the logarithm of the frequency in the range.

(3) The test result calculated as following:

Measurement Value = Reading Level + Correct Factor

Correct Factor = Insertion Loss + Cable Loss + Attenuator Factor (if use)

Margin Level = Measurement Value - Limit Value

The following table is the setting of the receiver

Receiver Parameters	Setting
Attenuation	10 dB
Start Frequency	0.009 MHz
Stop Frequency	30 MHz
IF Bandwidth	200Hz (from 9kHz to 150kHz) and 9kHz (from 150kHz to 30MHz).

3.1.2 MEASUREMENT INSTRUMENTS LIST

Item	Instr.Code	Kind of Equipment	Manufacturer	Type No.	Serial No.	Calibrated until
1	AN-E010	L.I.S.N	SCHWARZBECK	NSLK 8127	8127-669	2023-05-12
2	AN-E028	TRANSIENT LIMITER	CYBERTEK	EM5010A	E1950100113	2023-05-12
3	AN-E022	RF Cable	N/A	ZT06S-BNCJ-NJ-7.5M	19044020	2023-05-12
4	AN-E020	EMI Test Receiver	ROHDE&SCHWARZ	ESCI	101358	2023-05-12
5	AN-E058	1# Shielded Room	chengyu	8m*4m*3.3m	N/A	2024-11-12
6	AN-E046	Test Software	Farad	EZ-EMC Ver:ANCI-8A1	N/A	N/A

Remark: ” N/A” denotes No Model No., Serial No. or No Calibration specified.

3.1.3 TEST PROCEDURE

a. The EUT was placed 0.4 meters from the horizontal ground plane with EUT being connected to the power mains through a line impedance stabilization network (LISN). All other support equipments powered from additional LISN(s). The LISN provide 50 Ohm/ 50uH of coupling impedance for the measuring instrument.
b. Interconnecting cables that hang closer than 40 cm to the ground plane shall be folded back and forth in the center forming a bundle 30 to 40 cm long.
c. I/O cables that are not connected to a peripheral shall be bundled in the center. The end of the cable may be terminated, if required, using the correct terminating impedance. The overall length shall not exceed 1 m.
d. LISN at least 80 cm from nearest part of EUT chassis.
e. For the actual test configuration, please refer to the related Item –EUT Test Photos.

3.1.4 DEVIATION FROM TEST STANDARD

No deviation

3.1.5 TEST SETUP

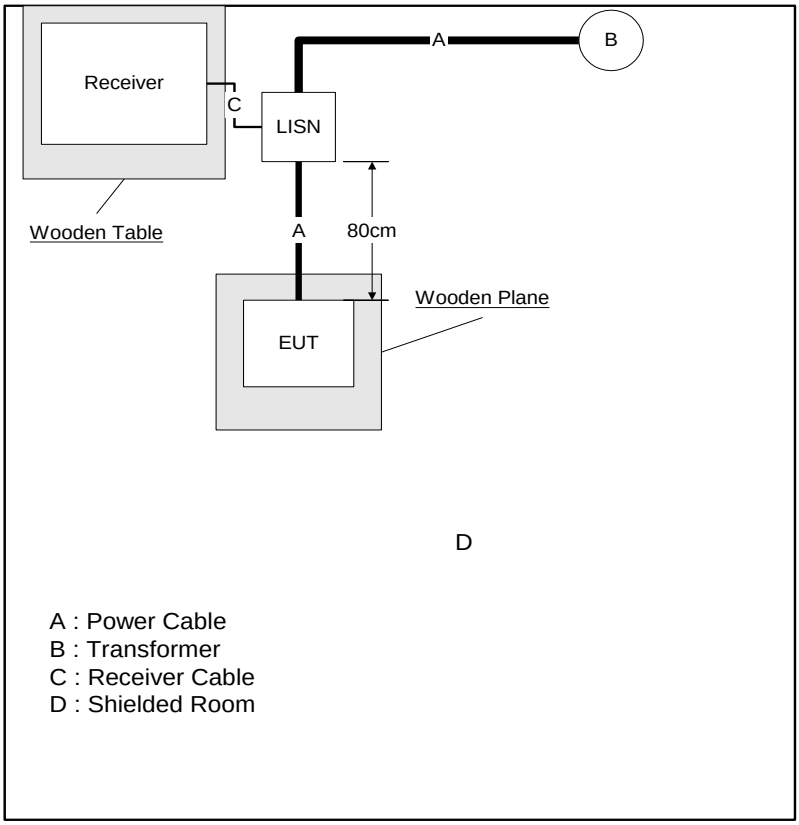

3.1.6 EUT OPERATING CONDITIONS

The EUT exercise program used during radiated and/or conducted emission measurement was designed to exercise the various system components in a manner similar to a typical use.

3.1.7 TEST RESULTS

No applicable the DC product.

3.2 WIRED NETWORK INTERFACES AND LOCAL WIRED PORTS OTHER THAN POWER SUPPLY

3.2.1 WIRED NETWORK INTERFACES OTHER THAN POWER SUPPLY

Disturbance voltage limits at the wired network interfaces		
Frequency range	Limits dB(μV)	
	Quasi-peak	Average
0.15MHz to 0.50MHz	84 to 74	74 to 64
0.50MHz to 30MHz	74	64
Disturbance current limits at the wired network interfaces		
Frequency range	Limits dB(μA)	
	Quasi-peak	Average
0.15MHz to 0.50MHz	40 to 30	30 to 20
0.50MHz to 30MHz	30	20

Notes:

(1) The tighter limit applies at the band edges.

3.2.2 DISTURBANCE VOLTAGE LIMITS AT THE LOCAL WIRED PORTS

Disturbance voltage limits at the local wired ports		
Frequency range	Limits dB(μA)	
	Quasi-peak	Average
0.15MHz to 0.50MHz	80	70
0.50MHz to 30MHz	74	64
Disturbance current limits at the local wired ports		
Frequency range	Limits dB(μA)	
	Quasi-peak	Average
0.15MHz to 0.50MHz	40 to 30	30 to 20
0.50MHz to 30MHz	30	20

Notes:

(1) The tighter limit applies at the band edges.

3.2.3 MEASUREMENT INSTRUMENTS LIST

Equipment	Manufacturer	Model No.	Serial No.	Next Cal.
ISN	SCHWARZBECK	NTFM 8158	237	2023-05-12
CURRENT PROBE	ROHDE&SCHWARZ	EZ-17	101602	2022-11-11
RF Cable	N/A	ZT06S-BNCJ-NJ-7.5M	19044020	2023-05-12
EMI Test Receiver	ROHDE&SCHWARZ	ESCI	101358	2023-05-12
1# Shielded Room	chengyu	8m*4m*3.3m	N/A	2024-11-12
Test Software	Farad	EZ-EMC Ver:ANCI-8A1	N/A	N/A

3.2.4 TEST PROCEDURE

A. The EUT was placed on a non-conductive table 0.8 m above a reference ground plane.
B. The EUT was placed on a non-conductive support 0.1 m above a reference ground plane.
C. All power was connected to the EUT through an Artificial Mains Network (AMN).
D. Conducted common mode disturbance voltage measurements on signal ports were made at the output of the Impedance Stabilization Network (ISN) in accordance with Annex C 4.1.6.2. The ISN was placed 0.8m from the boundary of the EUT and bonded to a reference ground plane.
E. Conducted common mode disturbance current measurements on signal ports were made with a current probe and externally fitted 150 Ω resistor in accordance with Annex C 4.1.6.3.
F. Conducted common mode disturbance current measurements on signal ports were made with using a combination of a current probe and capacitive voltage probe in accordance with Annex C 4.1.6.4.

3.2.5 TEST SETUP

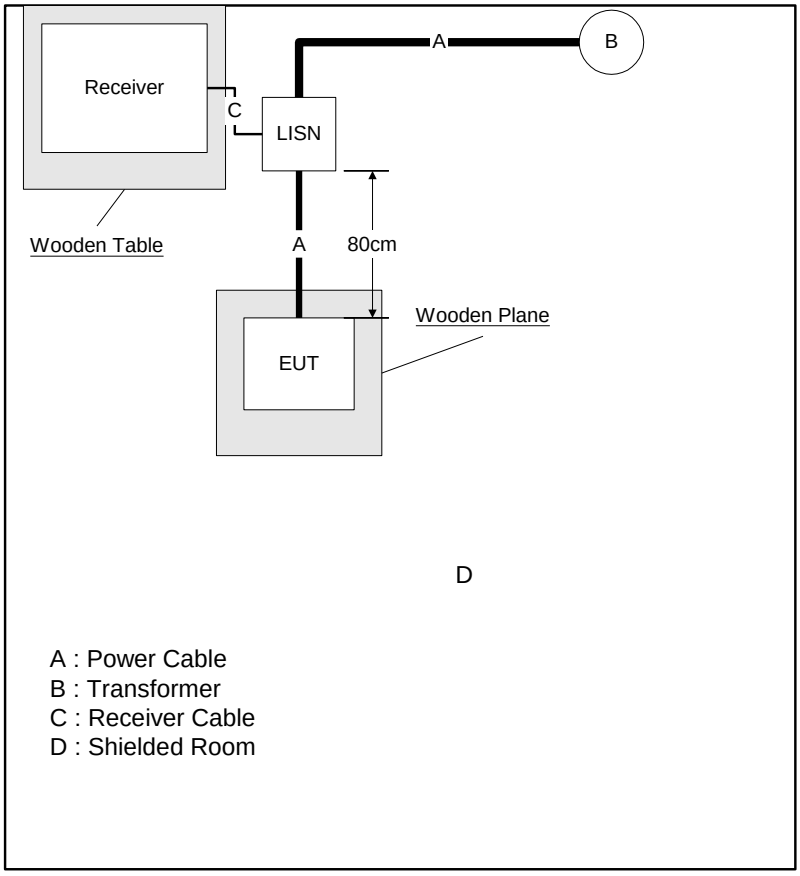

3.2.6 EUT OPERATING CONDITIONS

The EUT exercise program used during radiated and/or conducted emission measurement was designed to exercise the various system components in a manner similar to a typical use.

3.2.7 TEST RESULTS

EUT：	/	Model No.:	/
Temperature：	/	Relative Humidity：	/
Pressure：	/	Test Power ：	/
Test Engineer ：	/	Test Date ：	/
Test Mode ：	/		

Note:
1. This test is arranged according to the placement requirements of 3.2.4.
2. Test data see next page
3. This test is not applicable for products without dimming.
4. When the control line and load line are less than 3 meters, this test is not applicable.

3.3 RADIATED DISTURBANCE (30MHz to 1000MHz)

3.3.1 LIMITS OF RADIATED EMISSION MEASUREMENT (Below 1000MHz)

FREQUENCY (MHz)	LIMIT (at 3m)
	dBuV/m
30 – 230	40
230 – 1000	47

Notes:

1) The limit for radiated test was performed according to as following: CISPR 15.
2) The tighter limit applies at the band edges
3) Emission level (dBuV/m) =20log Emission level (uV/m).
4) Calculation formula: Level=Reading+Factor
   Margin=Level-Limit.

3.3.2 MEASUREMENT INSTRUMENTS LIST

3m Radiated Emission Measurement 30MHz-1GHz

Item	Instr.Code	Kind of Equipment	Manufacturer	Type No.	Serial No.	Calibrated until
1	AN-E023	EMI Test Receiver	Rohde & Schwarz	ESPI	100502	2022-11-11
2	AN-E006	Pre-Amplifier	HP	8447D	2727A06172	2023-05-12
3	AN-E009	Bilog Antenna	Schwarzbeck	VULB9163	VULB9163-588	2023-05-14
4	AN-E033	RF Cable	N/A	N/A	04040071-VI	2023-05-12
5	AN-E007	RF Cable	N/A	N/A	1007290	2023-05-12
6	AN-E043	3m Semi-anechoic Chamber	chengyu	9m*6m*6m	N/A	2024-11-11
7	AN-E045	Test Software	Farad	EZ-EMC Ver:ANCI-3A1	N/A	N/A

Remark: ” N/A” denotes No Model No. / Serial No. and No Calibration specified.

3.3.3 TEST PROCEDURE

a. The measuring distance of at 3 m shall be used for measurements at frequency up to 1GHz. For frequencies above 1GHz, any suitable measuring distance may be used.

b. The EUT was placed on the top of a rotating table 0.8 meters above the ground at a 3m or 10 meter open area test site. The table was rotated 360 degrees to determine the position of the highest radiation.
c. The height of the equipment or of the substitution antenna shall be 0.8 m; the height of the test antenna shall vary between 1 m to 4 m. Both horizontal and vertical polarizations of the antenna are set to make the measurement.
d. The initial step in collecting conducted emission data is a spectrum analyzer peak detector mode pre-scanning the measurement frequency range. Significant peaks are then marked and then Quasi Peak detector mode re-measured.
e. If the Peak Mode measured value compliance with and lower than Quasi Peak Mode Limit, the EUT shall be deemed to meet QP Limits and then no additional QP Mode measurement performed.
f. For the actual test configuration, please refer to the related Item –EUT Test Photos.

3.3.4 DEVIATION FROM TEST STANDARD

No deviation

3.3.5 TEST SETUP

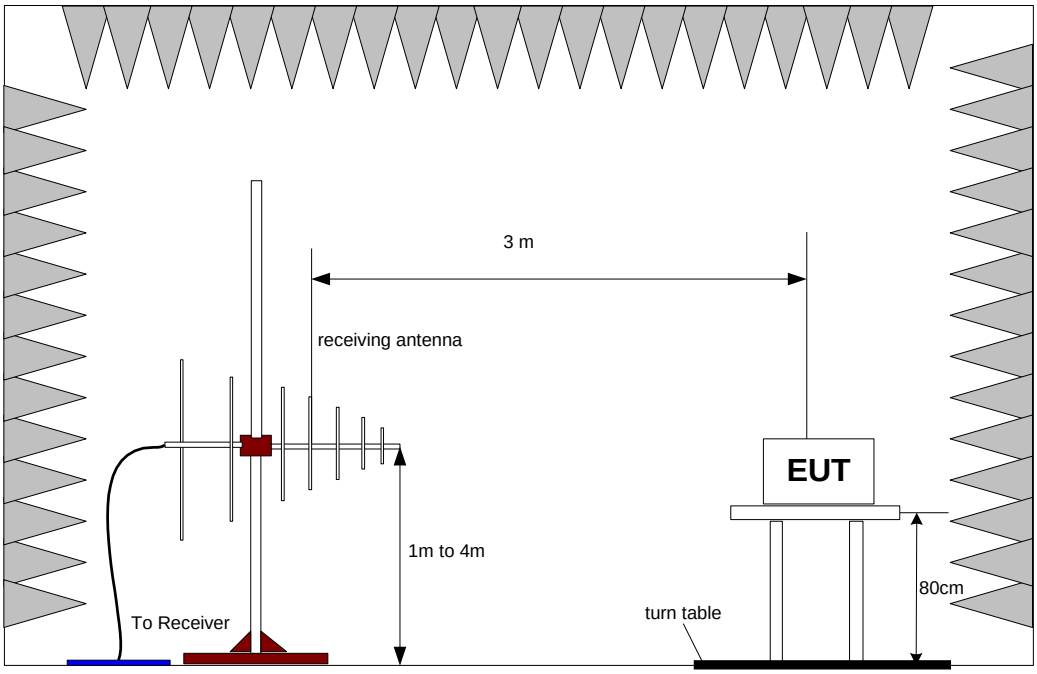

3.3.6 EUT OPERATING CONDITIONS

The EUT tested system was configured as the statements of 3**.1.6** Unless otherwise a special operating condition is specified in the follows during the testing.

3.3.7 TEST RESULTS

EUT：	Work light	Model No.：	W4R Work (502733RWL0)
Temperature：	26℃	Relative Humidity：	54%
Pressure：	1008 hPa	Test Power：	DC 5V and DC 3.7V
Test Engineer：	Sunshine	Test Date：	2022-10-9
Test Mode ：	1: Charging 2. Max Lighting 3. Min Lighting		

Remark：

(1) Reading in which marked as QP or Peak means measurements by using are Quasi-Peak Detector or Peak Detector.

(2) All readings are Peak unless otherwise stated QP in column of 『Note』. Peak denotes that the Peak reading compliance with the QP Limits and then QP Mode measurement didn't perform.

(3) Measuring frequency range from 30MHz to 1GHz.

(4) If the peak scan value lower limit more than 20dB, then this signal data does not show in table.

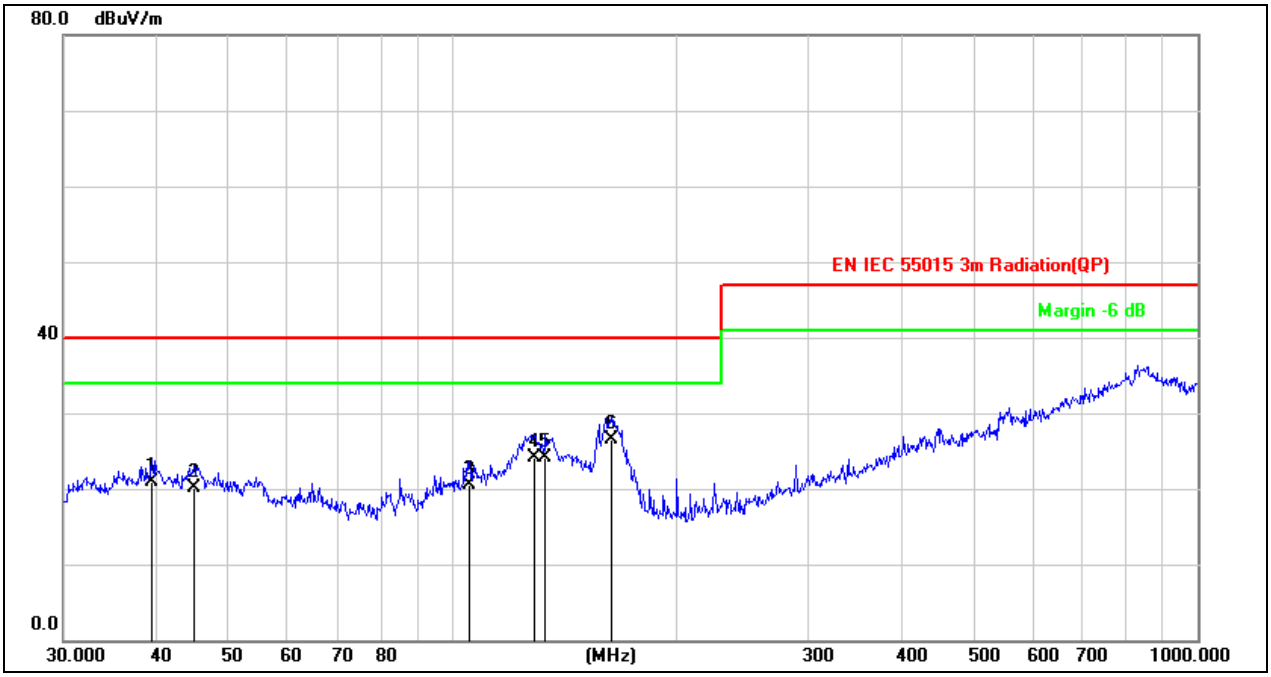

Site:	**LAB**	**Antenna::Vertical**	**Temperature(C):26(C)**
Limit:	**EN IEC 55015 3m Radiation(QP)**		**Humidity(%):54%**
EUT:	**Work light**	**Test Time:**	**2022/10/09**
M/N.:	**W4R Work (502733RWL0)**	**Power Rating:**	**DC 5V**
Mode:	**Charging**	**Test Engineer:**	**Sunshine**
Note:			

No.	Frequency (MHz)	Reading (dBuV)	Factor (dB/m)	Level (dBuV/m)	Limit (dBuV/m)	Margin (dB)	Det.
1	39.4371	31.59	-10.61	20.98	40.00	-19.02	QP
2	44.9006	30.25	-10.11	20.14	40.00	-19.86	QP
3	105.2718	32.17	-11.65	20.52	40.00	-19.48	QP
4	128.5630	35.87	-11.82	24.05	40.00	-15.95	QP
5	133.1511	35.88	-11.78	24.10	40.00	-15.90	QP
6	163.1818	38.10	-11.54	26.56	40.00	-13.44	QP

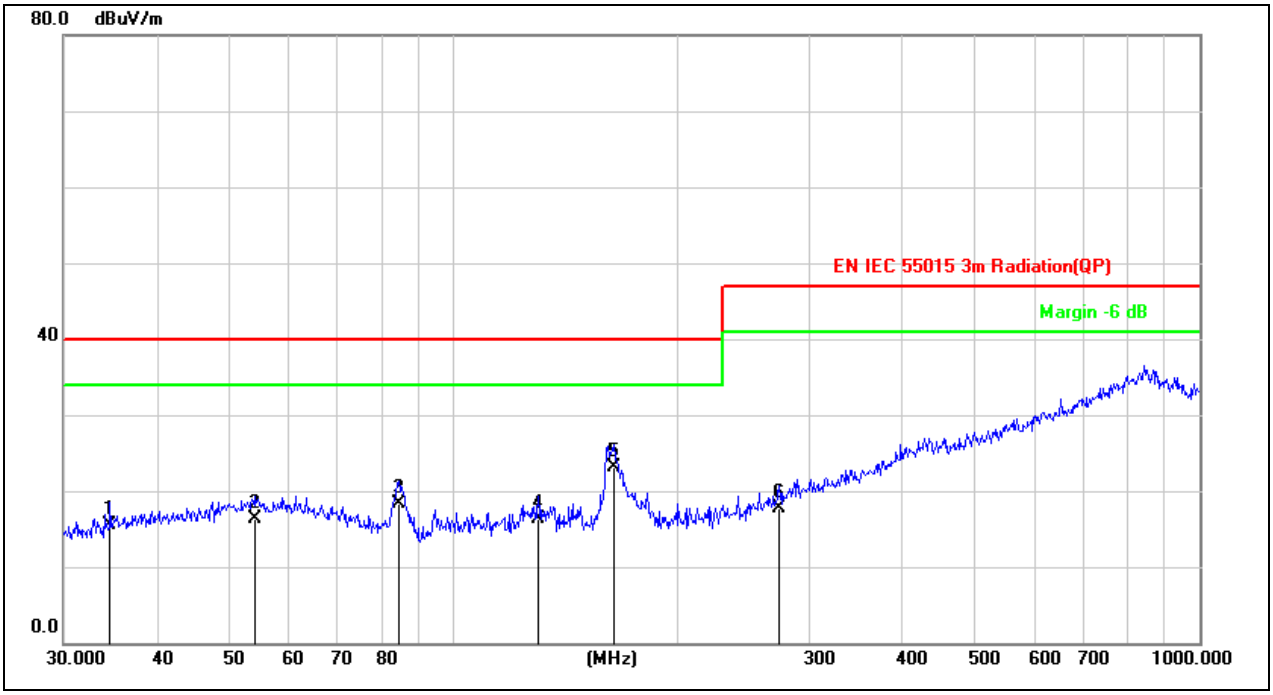

Site:	**LAB**	**Antenna::Horizontal**	**Temperature(C):26(C)**
Limit:	**EN IEC 55015 3m Radiation(QP)**		**Humidity(%):54%**
EUT:	**Work light**	**Test Time:**	**2022/10/09**
M/N.:	**W4R Work (502733RWL0)**	**Power Rating:**	**DC 5V**
Mode:	**Charging**	**Test Engineer:**	**Sunshine**
Note:			

No.	Frequency (MHz)	Reading (dBuV)	Factor (dB/m)	Level (dBuV/m)	Limit (dBuV/m)	Margin (dB)	Det.
1	34.6385	26.75	-11.32	15.43	40.00	-24.57	QP
2	54.0711	25.68	-9.32	16.36	40.00	-23.64	QP
3	84.4054	31.03	-12.72	18.31	40.00	-21.69	QP
4	129.9226	27.97	-11.72	16.25	40.00	-23.75	QP
5	164.3301	34.97	-11.78	23.19	40.00	-16.81	QP
6	273.2341	25.80	-8.17	17.63	47.00	-29.37	QP

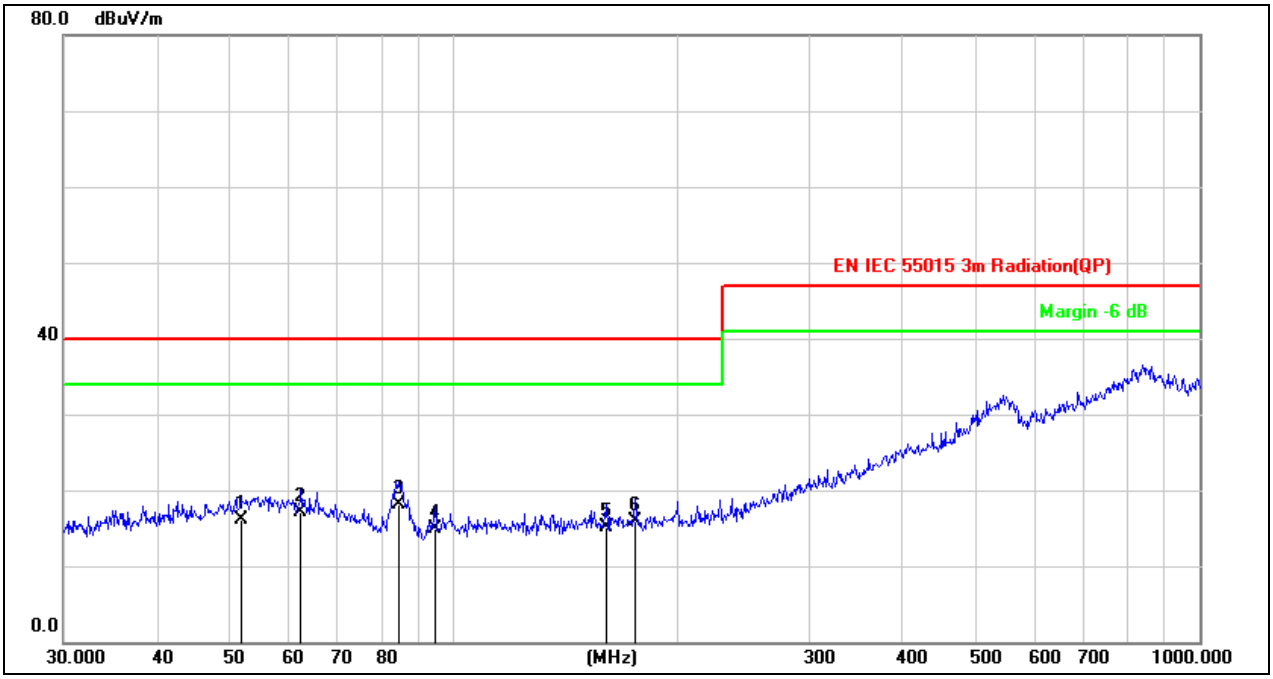

Site:	**LAB**	**Antenna::Horizontal**	**Temperature(C):26(C)**
Limit:	**EN IEC 55015 3m Radiation(QP)**		**Humidity(%):54%**
EUT:	**Work light**	**Test Time:**	**2022/10/09**
M/N.:	**W4R Work (502733RWL0)**	**Power Rating:**	**DC 3.7V**
Mode:	**Max Lighting**	**Test Engineer:**	**Sunshine**
Note:			

No.	Frequency (MHz)	Reading (dBuV)	Factor (dB/m)	Level (dBuV/m)	Limit (dBuV/m)	Margin (dB)	Det.
1	51.8430	25.35	-9.30	16.05	40.00	-23.95	QP
2	62.4313	26.00	-8.96	17.04	40.00	-22.96	QP
3	84.4054	30.88	-12.72	18.16	40.00	-21.84	QP
4	94.4283	27.33	-12.39	14.94	40.00	-25.06	QP
5	160.3456	26.63	-11.58	15.05	40.00	-24.95	QP
6	175.0367	27.11	-11.24	15.87	40.00	-24.13	QP

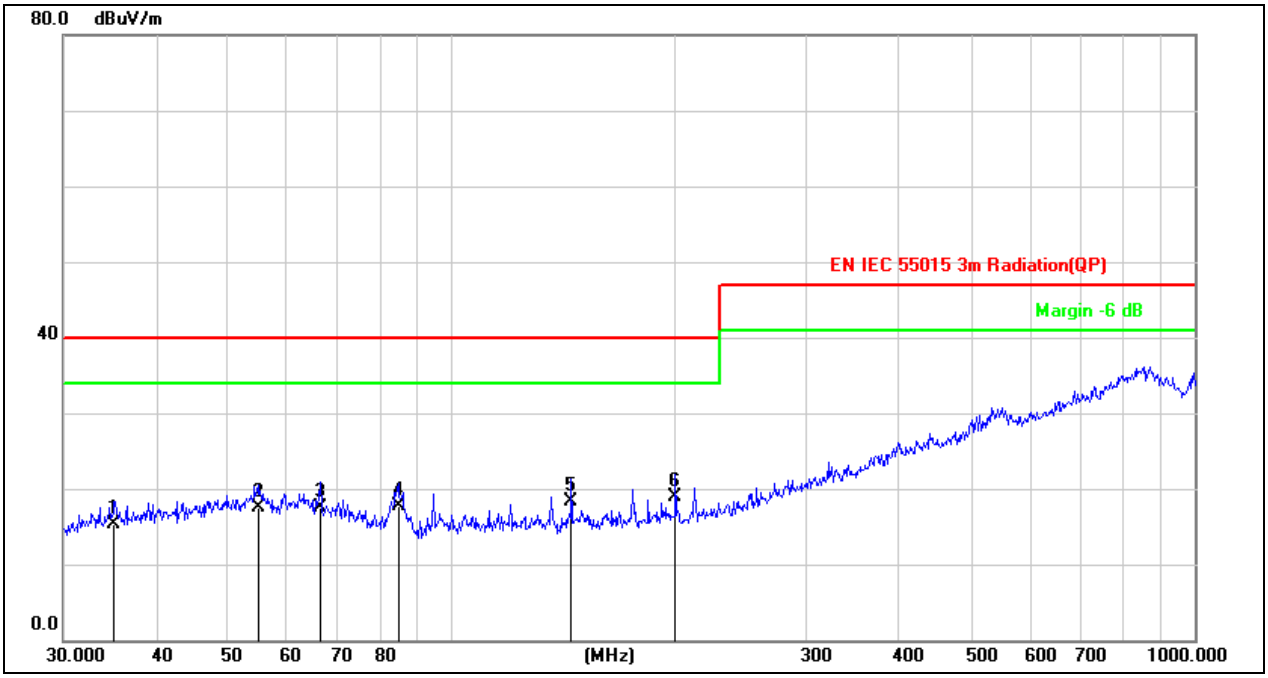

Site:	**LAB**	**Antenna::Vertical**	**Temperature(C):26(C)**
Limit:	**EN IEC 55015 3m Radiation(QP)**		**Humidity(%):54%**
EUT:	**Work light**	**Test Time:**	**2022/10/09**
M/N.:	**W4R Work (502733RWL0)**	**Power Rating:**	**DC 3.7V**
Mode:	**Max Lighting**	**Test Engineer:**	**Sunshine**
Note:			

No.	Frequency (MHz)	Reading (dBuV)	Factor (dB/m)	Level (dBuV/m)	Limit (dBuV/m)	Margin (dB)	Det.
1	35.1278	26.32	-11.06	15.26	40.00	-24.74	QP
2	54.8348	26.59	-9.12	17.47	40.00	-22.53	QP
3	66.4989	27.14	-9.66	17.48	40.00	-22.52	QP
4	84.7018	30.46	-12.81	17.65	40.00	-22.35	QP
5	144.8418	29.99	-11.70	18.29	40.00	-21.71	QP
6	199.9856	30.25	-11.29	18.96	40.00	-21.04	QP

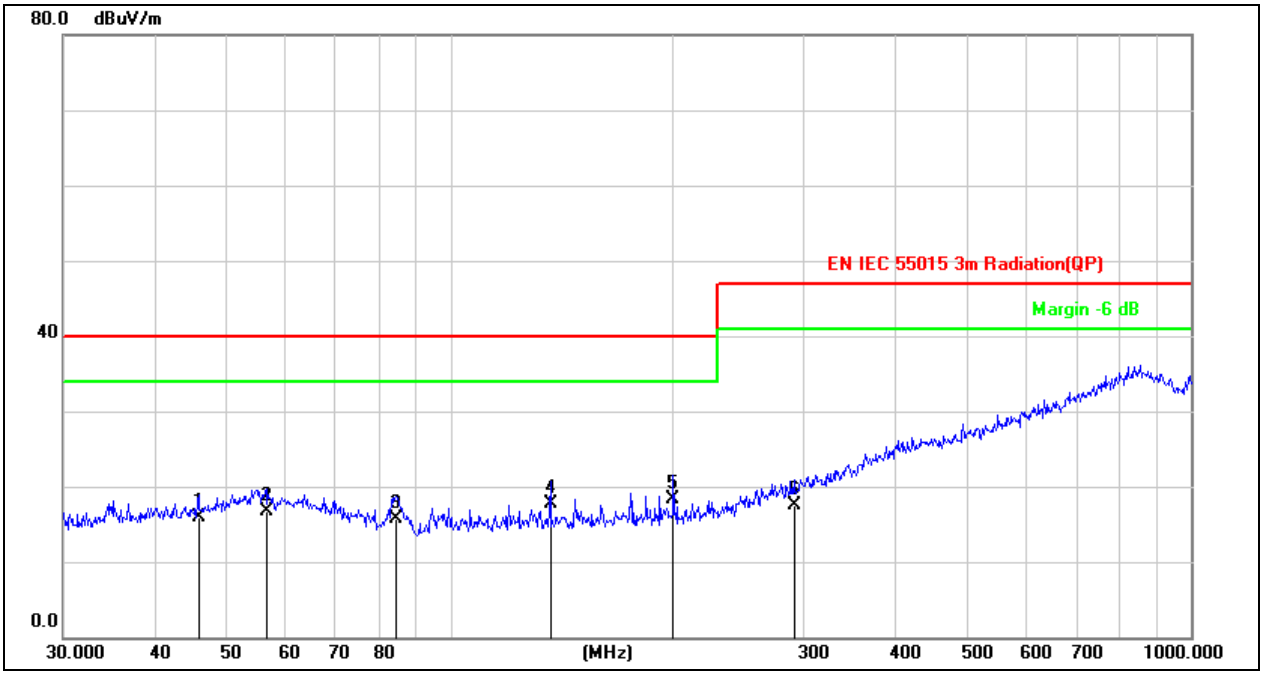

Site:	**LAB**	**Antenna::Vertical**	**Temperature(C):26(C)**
Limit:	**EN IEC 55015 3m Radiation(QP)**		**Humidity(%):54%**
EUT:	**Work light**	**Test Time:**	**2022/10/09**
M/N.:	**W4R Work (502733RWL0)**	**Power Rating:**	**DC 3.7V**
Mode:	**Min Lighting**	**Test Engineer:**	**Sunshine**
Note:			

No.	Frequency (MHz)	Reading (dBuV)	Factor (dB/m)	Level (dBuV/m)	Limit (dBuV/m)	Margin (dB)	Det.
1	45.6948	25.96	-10.12	15.84	40.00	-24.16	QP
2	56.3947	25.81	-9.13	16.68	40.00	-23.32	QP
3	84.4054	28.46	-12.72	15.74	40.00	-24.26	QP
4	136.4598	29.55	-11.85	17.70	40.00	-22.30	QP
5	199.9856	29.54	-11.29	18.25	40.00	-21.75	QP
6	291.0360	24.93	-7.52	17.41	47.00	-29.59	QP

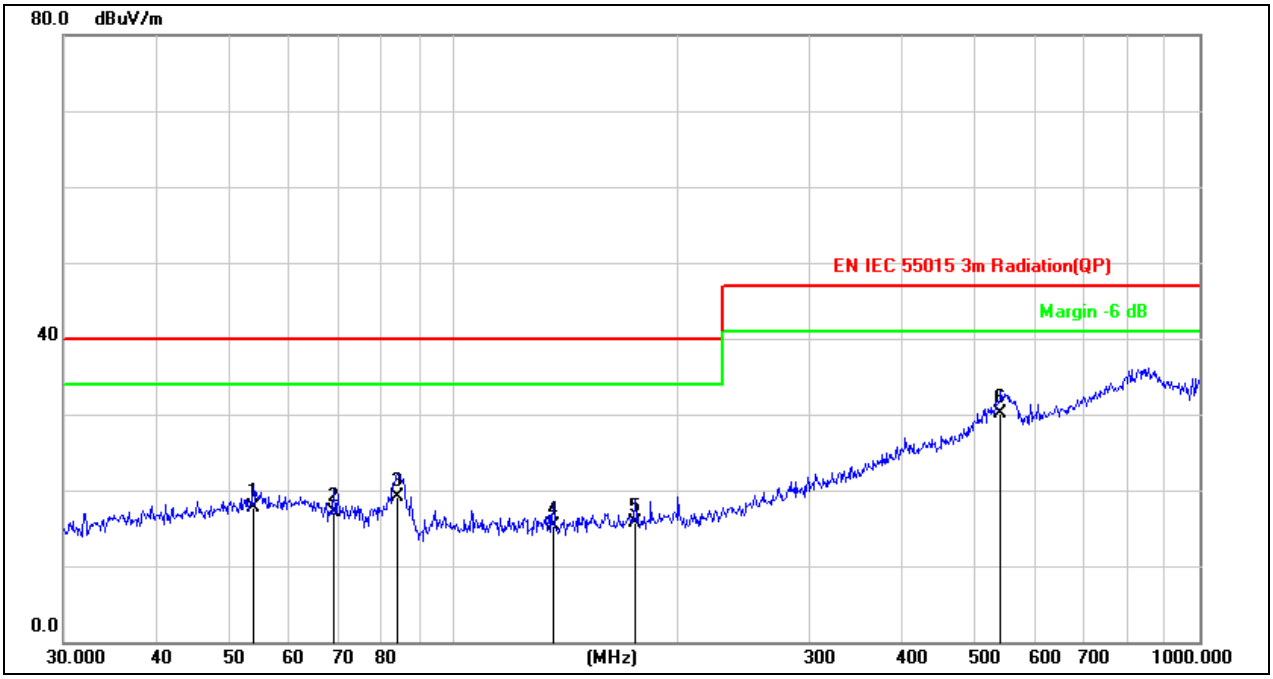

Site:	**LAB**	**Antenna::Horizontal**	**Temperature(C):26(C)**
Limit:	**EN IEC 55015 3m Radiation(QP)**		**Humidity(%):54%**
EUT:	**Work light**	**Test Time:**	**2022/10/09**
M/N.:	**W4R Work (502733RWL0)**	**Power Rating:**	**DC 3.7V**
Mode:	**Min Lighting**	**Test Engineer:**	**Sunshine**
Note:			

No.	Frequency (MHz)	Reading (dBuV)	Factor (dB/m)	Level (dBuV/m)	Limit (dBuV/m)	Margin (dB)	Det.
1	53.8818	27.05	-9.33	17.72	40.00	-22.28	QP
2	69.1141	27.23	-10.21	17.02	40.00	-22.98	QP
3	84.1100	31.68	-12.64	19.04	40.00	-20.96	QP
4	135.9822	27.03	-11.80	15.23	40.00	-24.77	QP
5	175.0368	26.96	-11.24	15.72	40.00	-24.28	QP
6	541.3725	30.49	-0.47	30.02	47.00	-16.98	QP

3.4 MAGNETIC EMISSION MEASUREMENT (9KHz to 30MHz)

3.4.1 MEASUREMENT INSTRUMENTS LIST

Item	Instr.Code	Kind of Equipment	Manufacturer	Type No.	Serial No.	Calibrated until
1	AN-E013	3 Loop Antenna	Da Ze	ZN30401	2944A09491	2023-05-12
3	AN-E026	RF Cable	N/A	ZT06S-NJ-NJ-3M	19044021	2023-05-12
4	AN-E020	EMI Test Receiver	ROHDE&SCHWARZ	ESCI	101358	2023-05-12
5	AN-E058	1# Shielded Room	chengyu	8m*4m*3.3m	N/A	2024-11-11
6	AN-E046	Test Software	Farad	EZ-EMC Ver:ANCI-8A1	N/A	N/A

Remark: ” N/A” denotes No Model No. / Serial No. and No Calibration specified.

3.4.2 LIMITS OF MAGNETIC EMISSION MEASUREMENT

Frequency Range	Limits for loop diameter dB(A)(1)
	2m
9KHz-70KHz	88
70KHz-150KHz	88-58
150KHz-3.0MHz	58-22
3.0MHz-30MHz	22

3.4.3 LARGE LOOP ANTENNA SETUP DIAGRAM

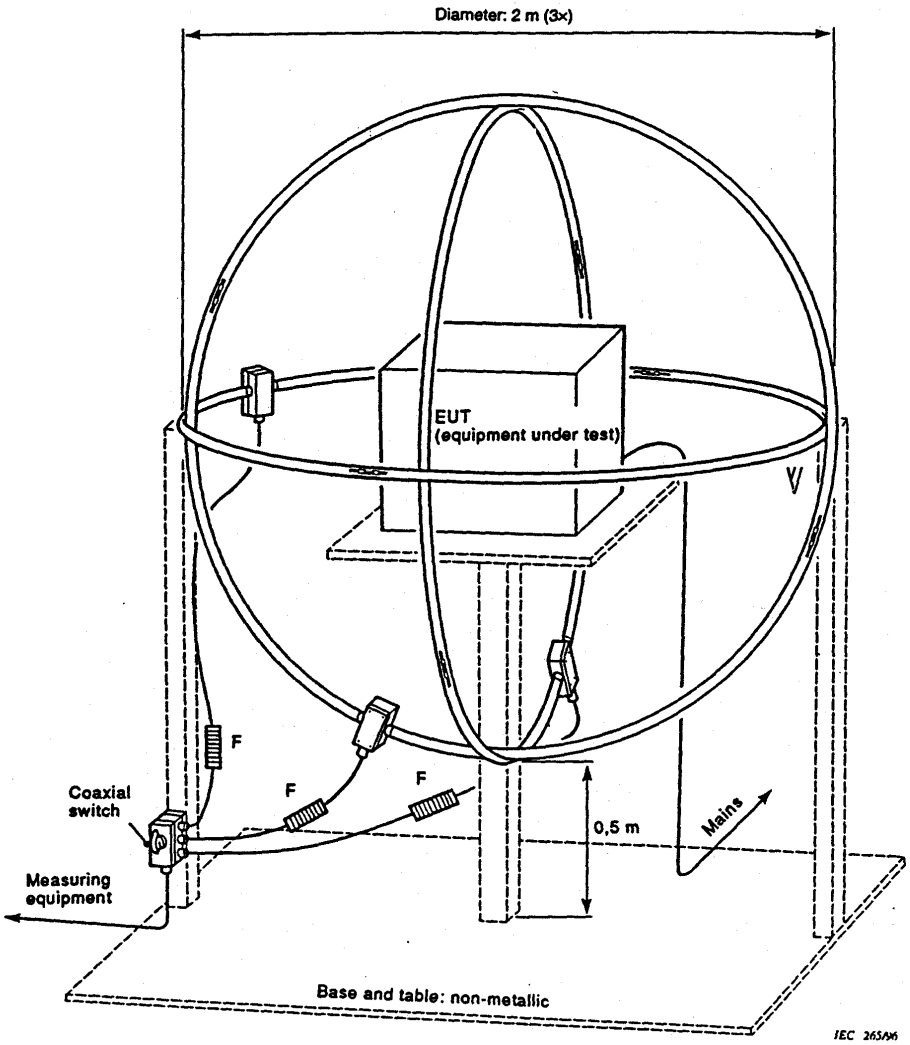

3.4.4 OPERATING CONDITIONS OF THE EUT

The exercise program used during conducted emission measurement was designed to exercise the EUT in a manner similar to a typical use. The exercise sequence is listed as below:

1. Setup the EUT and simulators as shown on 3.3.
2. Turn on the power of all equipments.
3. Start test.

3.4.5 MAGNETIC EMISSION DATA

The quasi-peak limits of the magnetic component of the radiated electromagnetic disturbance field strength in the frequency range **9kHz to 30MHz** measured as a current in 2m, loop antennas around the lighting equipment.

The measurement range of radiated emission, which is from **9kHz to 30MHz,** was investigated. All readings are quasi-peak values with a proper resolution Bandwidth. The initial step in collecting radiated emission data is a spectrum analyzer peak scans of the measurement range for all the test modes and then use test receiver for final measurement. Then the worst modes were reported the following data pages.

3.4.6 TEST RESULTS

EUT:	Work light	**Model No.:**	W4R Work (502733RWL0)
Temperature:	23.5℃	**Relative Humidity:**	52.6%
Pressure:	1008 hPa	**Test Power:**	DC 3.7V
Test Engineer:	Luffy	**Test Date:**	2022-10-9
Test Mode:	1: Max Lighting 2: Min Lighting		

Remarks:

1. Measurement = Reading + Factor
2. Over Limit (Margin Value) =Measurement level-Limit value.

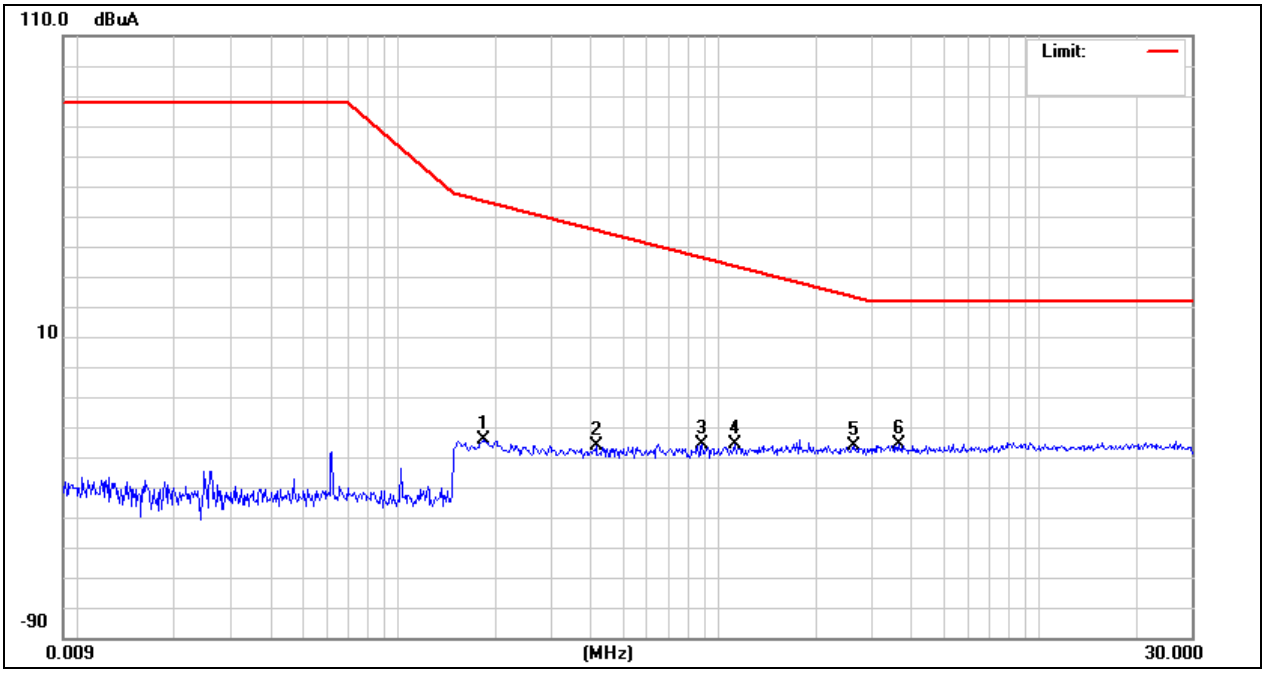

Site:	**ANCI 843.3**	**Phase:Z**	**Temperature(C):23.5(C)**
Limit:	**EN IEC 55015 TRIPLE LOOP**		**Humidity(%):52.6%**
EUT:	**Work light**	**Test Time:**	**2022-10-09**
M/N.:	**W4R Work (502733RWL0)**	**Power Rating:**	**DC 3.7V**
Mode:	**Max Lighting**	**Test Engineer:**	**Luffy**
Note:			

No.	Frequency (MHz)	Reading Level(dBuA)	Factor (dB)	Measure-ment(dBuA)	Limit (dBuA)	Over (dB)	Detector
1	0.1859	-26.03	1.61	-24.42	55.30	-79.72	peak
2	0.4138	-27.83	1.53	-26.30	45.72	-72.02	peak
3	0.8940	-27.20	1.48	-25.72	36.50	-62.22	peak
4	1.1298	-27.28	1.57	-25.71	33.69	-59.40	peak
5	2.6739	-28.06	1.82	-26.24	23.38	-49.62	peak
6	3.6539	-27.53	1.78	-25.75	22.00	-47.75	peak

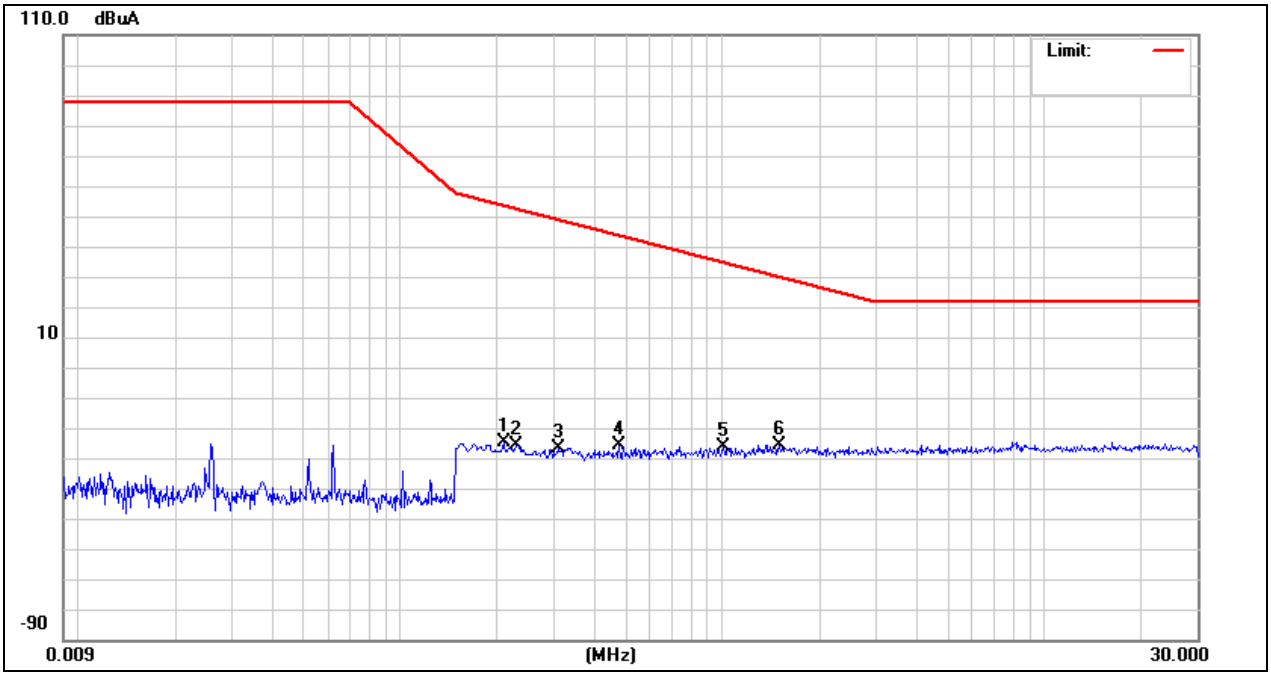

Site:	**ANCI 843.3**	**Phase:Y**	**Temperature(C):23.5(C)**
Limit:	**EN IEC 55015 TRIPLE LOOP**		**Humidity(%):52.6%**
EUT:	**Work light**	**Test Time:**	**2022-10-09**
M/N.:	**W4R Work (502733RWL0)**	**Power Rating:**	**DC 3.7V**
Mode:	**Max Lighting**	**Test Engineer:**	**Luffy**
Note:			

No.	Frequency (MHz)	Reading Level(dBuA)	Factor (dB)	Measure-ment(dBuA)	Limit (dBuA)	Over (dB)	Detector
1	0.2100	-26.45	1.61	-24.84	53.84	-78.68	peak
2	0.2300	-27.14	1.60	-25.54	52.75	-78.29	peak
3	0.3100	-28.21	1.57	-26.64	49.18	-75.82	peak
4	0.4818	-27.51	1.56	-25.95	43.90	-69.85	peak
5	1.0180	-27.89	1.54	-26.35	34.94	-61.29	peak
6	1.5140	-27.27	1.69	-25.58	30.19	-55.77	peak

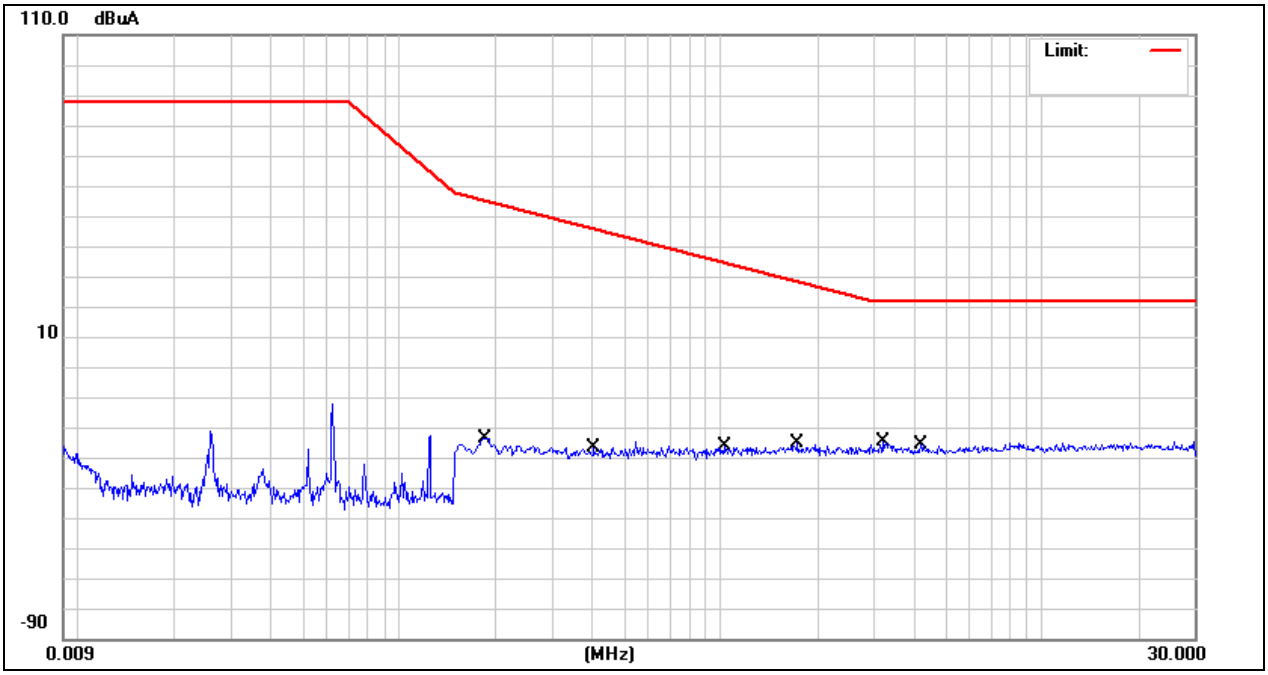

Site:	**ANCI 843.3**	**Phase:X**	**Temperature(C):23.5(C)**
Limit:	**EN IEC 55015 TRIPLE LOOP**		**Humidity(%):52.6%**
EUT:	**Work light**	**Test Time:**	**2022-10-09**
M/N.:	**W4R Work (502733RWL0)**	**Power Rating:**	**DC 3.7V**
Mode:	**Max Lighting**	**Test Engineer:**	**Luffy**
Note:			

No.	Frequency (MHz)	Reading Level(dBuA)	Factor (dB)	Measure-ment(dBuA)	Limit (dBuA)	Over (dB)	Detector
1	0.1859	-25.16	1.61	-23.55	55.30	-78.85	QP
2	0.4060	-28.33	1.52	-26.81	45.95	-72.76	QP
3	1.0339	-27.86	1.54	-26.32	34.76	-61.08	QP
4	1.7419	-27.19	1.76	-25.43	28.51	-53.94	QP
5	3.2019	-26.71	1.80	-24.91	22.00	-46.91	QP
6	4.3018	-27.50	1.80	-25.70	22.00	-47.70	QP

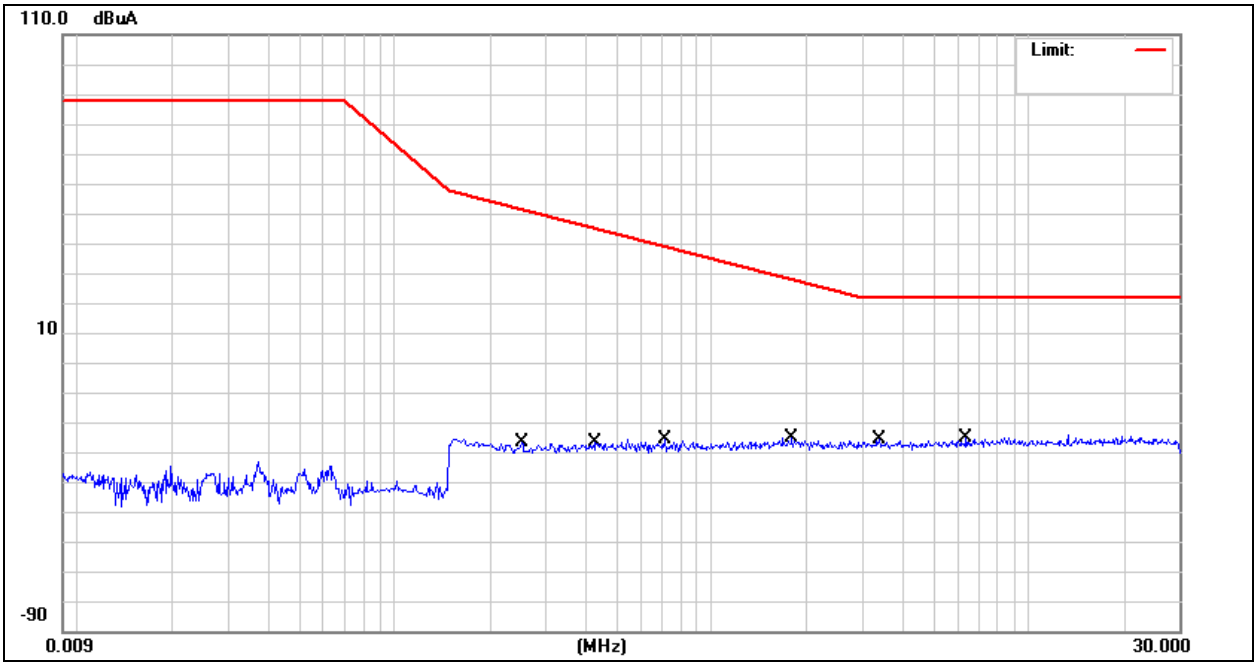

Site:	**ANCI 843.3**	**Phase:X**	**Temperature(C):23.5(C)**
Limit:	**EN IEC 55015 TRIPLE LOOP**		**Humidity(%):52.6%**
EUT:	**Work light**	**Test Time:**	**2022-10-09**
M/N.:	**W4R Work (502733RWL0)**	**Power Rating:**	**DC 3.7V**
Mode:	**Min Lighting**	**Test Engineer:**	**Luffy**
Note:			

No.	Frequency (MHz)	Reading Level(dBuA)	Factor (dB)	Measure-ment(dBuA)	Limit (dBuA)	Over (dB)	Detector
1	0.2540	-28.39	1.58	-26.81	51.56	-78.37	QP
2	0.4339	-28.17	1.54	-26.63	45.15	-71.78	QP
3	0.7177	-27.37	1.50	-25.87	39.13	-65.00	QP
4	1.8060	-26.94	1.78	-25.16	28.08	-53.24	QP
5	3.3980	-27.77	1.79	-25.98	22.00	-47.98	QP
6	6.3859	-27.45	1.97	-25.48	22.00	-47.48	QP

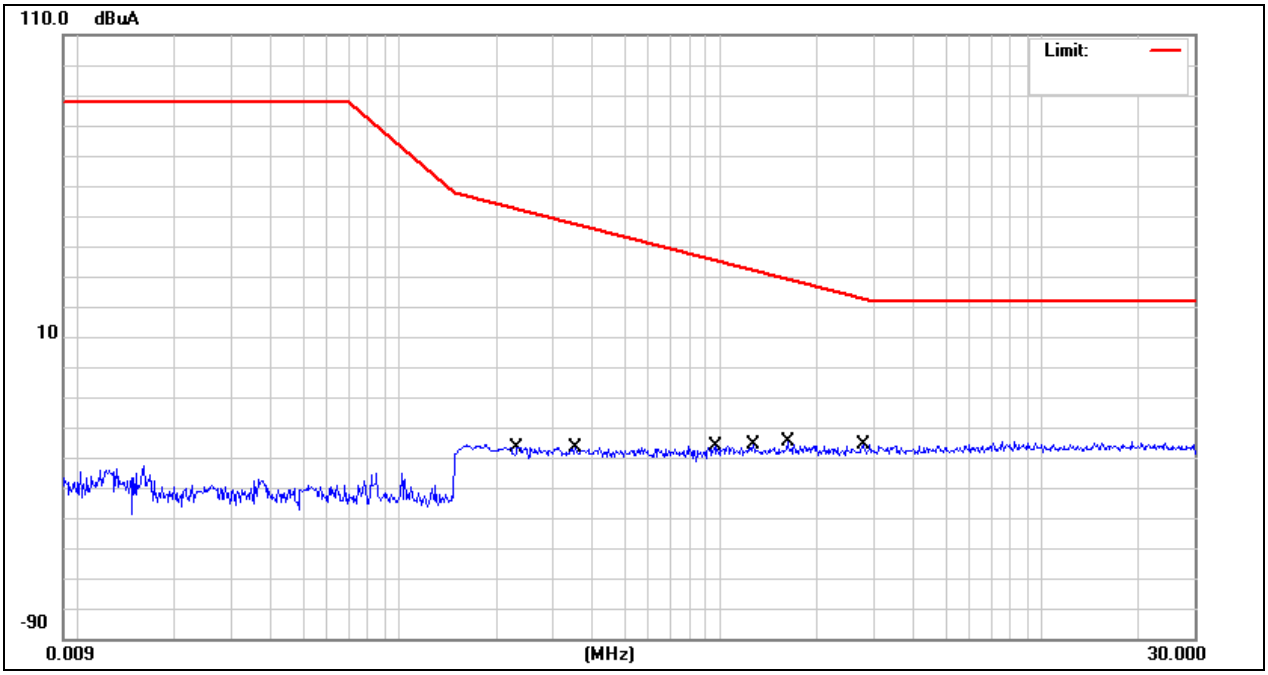

Site:	**ANCI 843.3**	**Phase:Y**	**Temperature(C):23.5(C)**
Limit:	**EN IEC 55015 TRIPLE LOOP**		**Humidity(%):52.6%**
EUT:	**Work light**	**Test Time:**	**2022-10-09**
M/N.:	**W4R Work (502733RWL0)**	**Power Rating:**	**DC 3.7V**
Mode:	**Min Lighting**	**Test Engineer:**	**Luffy**
Note:			

No.	Frequency (MHz)	Reading Level(dBuA)	Factor (dB)	Measure-ment(dBuA)	Limit (dBuA)	Over (dB)	Detector
1	0.2340	-28.12	1.59	-26.53	52.55	-79.08	QP
2	0.3537	-28.30	1.54	-26.76	47.60	-74.36	QP
3	0.9697	-27.73	1.51	-26.22	35.52	-61.74	QP
4	1.2700	-27.58	1.61	-25.97	32.29	-58.26	QP
5	1.6180	-26.69	1.73	-24.96	29.39	-54.35	QP
6	2.7980	-27.69	1.81	-25.88	22.83	-48.71	QP

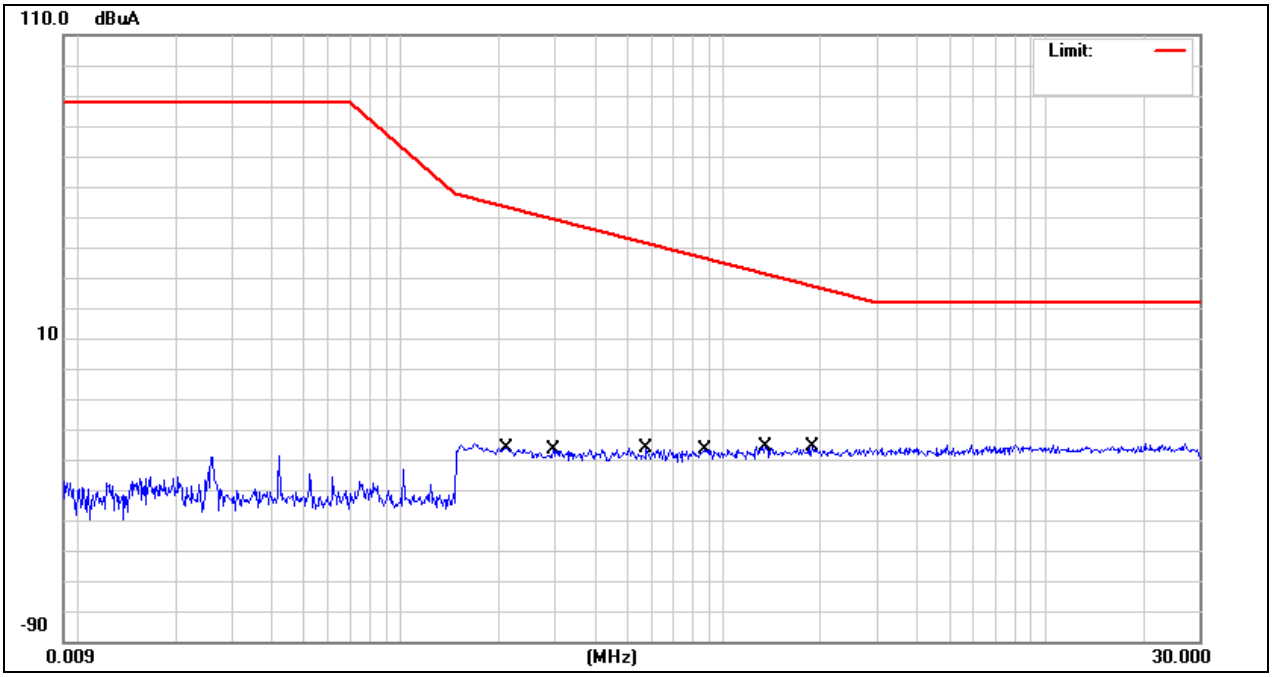

Site:	**ANCI 843.3**	**Phase:Z**	**Temperature(C):23.5(C)**
Limit:	**EN IEC 55015 TRIPLE LOOP**		**Humidity(%):52.6%**
EUT:	**Work light**	**Test Time:**	**2022-10-09**
M/N.:	**W4R Work (502733RWL0)**	**Power Rating:**	**DC 3.7V**
Mode:	**Min Lighting**	**Test Engineer:**	**Luffy**
Note:			

No.	Frequency (MHz)	Reading Level(dBuA)	Factor (dB)	Measure-ment(dBuA)	Limit (dBuA)	Over (dB)	Detector
1	0.2139	-27.80	1.60	-26.20	53.62	-79.82	QP
2	0.2977	-28.45	1.56	-26.89	49.66	-76.55	QP
3	0.5776	-27.90	1.61	-26.29	41.73	-68.02	QP
4	0.8820	-28.00	1.47	-26.53	36.66	-63.19	QP
5	1.3619	-27.47	1.64	-25.83	31.46	-57.29	QP
6	1.8895	-27.77	1.81	-25.96	27.54	-53.50	QP

3.5 HARMONICS CURRENT MEASUREMENT

3.5.1 LIMITS OF HARMONICS CURRENT MEASUREMENT

Table 3 – Limits for Class C equipment

Harmonic order h	Maximum permissible harmonic current per watt mA/W	Maximum permissible harmonic current A
3	3,4	2,30
5	1,9	1,14
7	1,0	0,77
9	0,5	0,40
11	0,35	0,33
$13 \leq h \leq 39$ (odd harmonics only)	$\frac{3,85}{h}$	See Table 1

Rated power ≥ 5 W and ≤ 25 W

Table 2 – Limits for Class C equipment [a]

Harmonic order h	Maximum permissible harmonic current expressed as a percentage of the input current at the fundamental frequency %
2	2
3	[A1] 27 [b] [A1]
5	10
7	7
9	5
$11 \leq h \leq 39$ (odd harmonics only)	3

[a] For some Class C products, other emission limits apply (see 7.4).

[A1] [b] The limit is determined based on the assumption of modern lighting technologies having power factors of 0,90 or higher. [A1]

Rated Power>25W

3.5.2 MEASUREMENT INSTRUMENTS LIST

Item	Instr.Code	Kind of Equipment	Manufacturer	Type No.	Serial No.	Calibrated until
1	AN-E036	Harmonic and Fliker Analyzer	EMC PARTNER	Harmonics 1000-1P 230V	0241	2023-05-12

Remark: ” N/A” denotes No Model No. / Serial No. and No Calibration specified.

3.5.3 TEST PROCEDURE

a. Test was performed according to the procedures specified in Clause 5.0 of IEC555-2 and/or Sub-clause 6.2 of EN IEC 61000-3-2 depend on which standard adopted for compliance measurement.
b. All types of harmonic current and/or voltage fluctuation in this report are assessed by direct measurement using flicker-meter.
c. For the actual test configuration, please refer to the related Item –EUT Test Photos.

3.5.4 DEVIATION FROM TEST STANDARD

No deviation

3.5.5 TEST SETUP

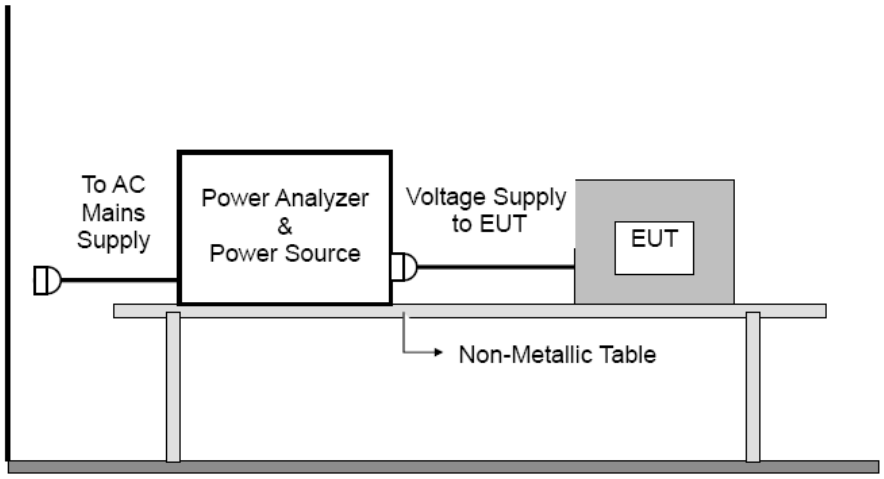

3.5.6 EUT OPERATING CONDITIONS

The EUT tested system was configured as the statements of 3.1.6 Unless otherwise a special operating condition is specified in the follows during the testing.

3.5.7 TEST RESUL

EUT：	/	Model No.:	/
Temperature：	/	Relative Humidity：	/
Pressure：	/	Test Power ：	/
Test Engineer ：	/	Test Date ：	/
Observation Time	/	Test Mode	/

Remark:
1. The test data see next page.
2. Enter products with active power less than 5W. Not considered in this test
3. After testing, the test result meets the percentage of the maximum allowable harmonic current mentioned in the standard to the input current at the fundamental frequency.

3.6 VOLTAGE FLUCTUATION AND FLICKS MEASUREMENT

3.6.1 LIMITS OF VOLTAGE FLUCTUATION AND FLICKSMEASUREMENT

Tests	Limits		Descriptions
	IEC555-3	IEC/EN 61000-3-2	
Pst	≤ 1.0, Tp= 10 min.	≤ 1.0, Tp= 10 min.	Short Term Flicker Indicator
Plt	N/A	≤ 0.65, Tp=2 hr.	Long Term Flicker Indicator
dc	≤ 3 %	≤ 3.3 %	Relative Steady-State V-Chang
dmax	≤ 4 %	≤ 4 %	Maximum Relative V-change
d (t)	N/A	≤ 3.3% for > 500 ms	Relative V-change characteristic

3.6.2 MEASUREMENT INSTRUMENTS LIST

Item	Instr.Code	Kind of Equipment	Manufacturer	Type No.	Serial No.	Calibrated until
1	AN-E036	Harmonic and Fliker Analyzer	EMC PARTNER	Harmonics 1000-1P 230V	0241	2023-05-12

Remark: ” N/A” denotes No Model No. / Serial No. and No Calibration specified.

3.6.3 TEST PROCEDURE

a. Fluctuation and Flickers Test:
Tests was performed according to the Test Conditions/Assessment of Voltage Fluctuations specified in Clause 5.0/6.0 of IEC555-3 and/or Clause 6.0/4.0 of IEC/EN 61000-3-3 depend on which standard adopted for compliance measurement.

b. All types of harmonic current and/or voltage fluctuation in this report are assessed by direct measurement using flicker-meter.

c. For the actual test configuration, please refer to the related Item –EUT Test Photos.

3.6.4 DEVIATION FROM TEST STANDARD

No deviation

3.6.5 TEST SETUP

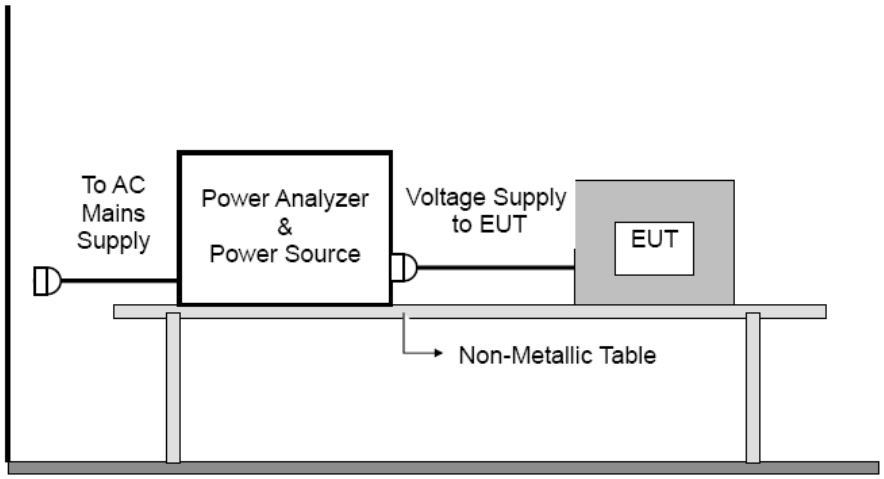

3.6.6 EUT OPERATING CONDITIONS

The EUT tested system was configured as the statements of 3.1.6 Unless otherwise a special operating condition is specified in the follows during the testing.

3.6.7 TEST RESULTS

EUT：	/	Model No.:	/
Temperature：	/	Relative Humidity：	/
Pressure：	/	Test Power ：	/
Test Engineer ：	/	Test Date ：	/
Test Mode ：	/		

Remark: Testing of lamps with input power less than 600W is not considered

4. EMC IMMUNITY TEST

4.1 STANDARD COMPLIANCE/SERVRITY LEVEL/CRITERIA

Tests Standard No.	Test Specification	Test Mode Test Ports	Perform. Criteria	Remark
1. ESD IEC/EN 61000-4-2	8KV air discharge 4KV contact discharge	Direct Mode	B	PASS
	4KV HCP discharge 4KV VCP discharge	Indirect Mode	B	PASS
2. RS IEC/EN 61000-4-3	80 MHz to 1000 MHz 3V/m(rms), 1 KHz, 80%, AM modulated	Enclosure	A	PASS
3. EFT/Burst IEC/EN 61000-4-4	1.0KV(peak) 5/50ns Tr/Th 5KHz Repetition Freq.	AC Power Port	B	N/A
	0.5 KV(peak) 5/50ns Tr/Th 5KHz Repetition Freq.	CTL/Signal Data Line Port	B	N/A
4. Surges IEC/EN 61000-4-5	For Self-ballast lamp and semi-luminaries: L-N: 0.5 KV L-PE, N-PE: 1 KV For luminaries and independent auxiliary: ≦25W: L-N: 0.5 KV L-PE, N-PE: 1 KV >25W: L-N: 1KV L-PE, N-PE: 2 KV 1.2/50(8/20) Tr/Th us	L-N	C	N/A
5 Injected Current IEC/EN 61000-4-6	0.15 MHz to 80 MHz 3V(rms), 1KHz 80%, AM Modulated 150Ω source impedance	AC Power Port	A	N/A
6. Power Frequency Magnetic Field IEC/EN 61000-4-8	50 Hz/60Hz, 3A/m	Enclosure	A	N/A
7. Volt. Interruptions Volt. Dips IEC/EN 61000-4-11	Voltage dip 30% Interruption 100%	70% / 0%	B / C	N/A

* Remark:

(1) "N/A": denotes test is not applicable in this Test Report.

(2) Voltage dip: 30% reduction – Performance Criteria **C**
Voltage Interruption: 100% reduction – Performance Criteria **C**

4.2 GENERAL PERFORMANCE CRITERIA

According to **EN61547:2009** standard, the general performance criteria as following:

Criterion A	During the test no change of the luminous intensity shall be observed and the regulating control, if any shall operate during the test as intended.
Criterion B	During the test the luminous intensity may change to any value. After the test the luminous intensity shall be restored to its initial value within 1 min. Regulating controls need not function during the test, but after the test the mode of the control shall be the same as before the test provided that during the test no mode changing commands were given.
Criterion C	During and after the test any change of the luminous intensity is allowed and the lamps(s) ma be extinguished. After the test, within 30 min, all function shall return to normal if necessary by temporary interruption of the mains supply and/or operating the regulating control. Additional requirement for lighting equipment incorporating a starting device.: After the test the lighting equipment is switched off. After half an hour it is switched on again. The lighting equipment shall start and operate as intended.

4.3 GENERAL PERFORMANCE CRITERIA TEST SETUP

The EUT tested system was configured as the statements of 3.1.6 Unless otherwise a special operating condition is specified in the follows during the testing.

4.4 ESD TESTING

4.4.1 TEST SPECIFICATION

Basic Standard:	IEC/EN 61000-4-2
Discharge Impedance:	330 ohm / 150 pF
Required Performance	B
Discharge Voltage:	Air Discharge：2KV/4KV/8KV (Direct) Contact Discharge：2KV/4KV (Direct/Indirect)
Polarity:	Positive & Negative
Number of Discharge:	Air Discharge: min. 10 times at each test point Contact Discharge: min. 200 times in total
Discharge Mode:	Single Discharge
Discharge Period:	1 second minimum

4.4.2 MEASUREMENT INSTRUMENTS

Item	Instr.Code	Kind of Equipment	Manufacturer	Type No.	Serial No.	Calibrated until
1	AN-E002	ESD Simulator	TESEQ	NSG437	336	2023-05-23

Remark: ” N/A” denotes No Model No. / Serial No. and No Calibration specified.

4.4.3 TEST PROCEDURE

The test generator necessary to perform direct and indirect application of discharges to the EUT in the following manner:

a. Contact discharge was applied to conductive surfaces and coupling planes of the EUT.
   During the test, it was performed with single discharges. For the single discharge time between successive single discharges was at least 1 second. The EUT shall be exposed to at least 200 discharges, 100 each at negative and positive polarity, at a minimum of four test points. One of the test points shall be subjected to at least 50 indirect discharges to the center of the front edge of the horizontal coupling plane. The remaining three test points shall each receive at least 50 direct contact discharges.
   If no direct contact test points are available, then at least 200 indirect discharges shall be applied in the indirect mode. Test shall be performed at a maximum repetition rate of one discharge per second.
   Vertical Coupling Plane (VCP):
   The coupling plane, of dimensions 0.5m x 0.5m, is placed parallel to, and positioned at a distance 0.1m from, the EUT, with the Discharge Electrode touching the coupling plane.
   The four faces of the EUT will be performed with electrostatic discharge.
   Horizontal Coupling Plane (HCP):
   The coupling plane is placed under to the EUT. The generator shall be positioned vertically at a distance of 0.1m from the EUT, with the Discharge Electrode touching the coupling plane.
   The four faces of the EUT will be performed with electrostatic discharge.
b. Air discharges at insulation surfaces of the EUT.
   It was at least ten single discharges with positive and negative at the same selected point.
c. For the actual test configuration, please refer to the related Item –EUT Test Photos.

4.4.4 DEVIATION FROM TEST STANDARD

No deviation

4.4.5 TEST SETUP

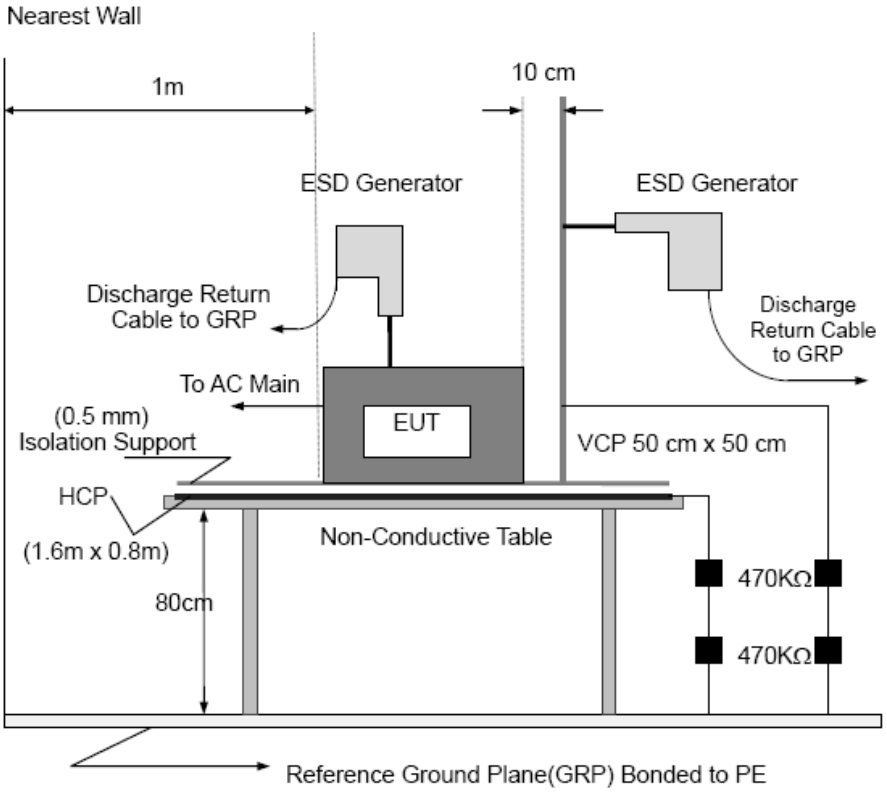

Note:

TABLE-TOP EQUIPMENT

The configuration consisted of a wooden table 0.8 meters high standing on the Ground Reference Plane. The GRP consisted of a sheet of aluminum at least 0.25mm thick, and 2.5 meters square connected to the protective grounding system. A Horizontal Coupling Plane (1.6m x 0.8m) was placed on the table and attached to the GRP by means of a cable with 940k total impedance. The equipment under test, was installed in a representative system as described in section 7 of IEC /EN 61000-4-2, and its cables were placed on the HCP and isolated by an insulating support of 0.5mm thickness. A distance of1-meter minimum was provided between the EUT and the walls of the laboratory and any other metallic structure.

FLOOR-STANDING EQUIPMENT

The equipment under test was installed in a representative system as described in section 7 of IEC/EN 61000-4-2, and its cables were isolated from the Ground Reference Plane by an insulating support of0.1-meter thickness. The GRP consisted of a sheet of aluminum that is at least 0.25mm thick, and 2.5meters square connected to the protective grounding system and extended at least 0.5 meters from the EUT on all sides.

4.4.6 TEST RESULTS

EUT：	Work light	Model No.:	W4R Work (502733RWL0)
Temperature：	23.1℃	Relative Humidity：	51.5%
Pressure：	1008 hPa	Test Power ：	Battery 3.7V
Test Engineer：	Rock	Test Date：	2022-10-11
Test Mode ：	1.Max Lighting 2. Min Lighting		

Mode	Air Discharge								Contact Discharge							
	2KV		4KV		8KV		12KV		2KV		4KV		6KV		8KV	
Location	P	N	P	N	P	N	P	N	P	N	P	N	P	N	P	N
1	--	--	--	--	--	--	--	--	A	A	A	A	--	--	--	--
2	--	--	A	A	A	A	--	--	--	--	--	--	--	--	--	--
3	-	--	--	--	--	--	--	--	--	--	--	--	--	--	--	--
4	--	--	--	--	--	--	--	--	--	--	--	--	--	--	--	--
Criteria	**B**								**B**							
Result	**A**								**A**							
Judgment	**PASS**								**N/A**							

Mode	HCP Discharge								VCP Discharge							
	2KV		4KV		6KV		8KV		2KV		4KV		6KV		8KV	
Location	P	N	P	N	P	N	P	N	P	N	P	N	P	N	P	N
Front sides	-	--	A	A	--	--	--	--	-	--	A	A	--	--	--	--
Rear sides	--	--	A	A	--	--	--	--	--	--	A	A	--	--	--	--
Left sides	--	--	A	A	-	--	--	--	--	--	A	A	-	--	--	--
Right sides	-	--	A	A	--	--	--	--	--	--	A	A	--	--	--	--
Criteria	**B**								**B**							
Result	**A**								**A**							
Judgment	**PASS**								**PASS**							

Note:

1) P/N denotes the Positive/Negative polarity of the output voltage.
2) Test condition:
   Direct discharges: Minimum 20 times (Positive/Negative) at each point.
   Air discharges / Indirect (HCP/VCP): Minimum 20 times (Positive/Negative) at each point.
3) Test location(s) in which discharge (Air and contact discharge) to be described as following
4) The Indirect (HCP/VCP) discharges description of test point as following:
   1.left side 2.right side 3.front side 4.rear side
5) N/A - denotes test is not applicable in this test report

Test Point:

No	Description	No	Description	No	Description
1	Metal surface	4			
2	EUT gap	5			
3		6			

4.5 RS TESTING

4.5.1 TEST SPECIFICATION

Basic Standard:	IEC/EN 61000-4-3
Required Performance	A
Frequency Range:	80 MHz - 1000 MHz
Field Strength:	3 V/m
Modulation:	1kHz Sine Wave, 80%, AM Modulation
Frequency Step:	1 % of fundamental
Polarity of Antenna:	Horizontal and Vertical
Test Distance:	3 m
Antenna Height:	1.5 m
Dwell Time:	at least 3 seconds

4.5.2 MEASUREMENT INSTRUMENTS

Item	Kind of Equipment	Manufacturer	Type No.	Serial No.	Calibrated until
1	Signal Generator	Aglilet	N5171B-50B	MY53050160	2023-08-24
2	Amplifier	A&R	150W1000M3	313157	2023-07-25
3	Amplifier	A&R	50SIG6M1	0342835	2023-07-25
4	Power Meter	Boonton	4232A	150102	2023-07-14
5	Isotropic Field Probe	A&R	FL7006	0342652	2022-10-24
6	Log-periodic Antenna	SCHWARZBECK	STLP 9128E	9128E-012	2022-12-06
7	Microwave log-periodic antenna	SCHWARZBECK	STLP 9149	9149.222	2022-12-06

Remark: ” N/A” denotes No Model No. / Serial No. and No Calibration specified.

4.5.3 TEST PROCEDURE

The EUT and support equipment, which are placed on a table that is 0.8 meter above ground and the testing was performed in a fully-anechoic chamber.
The testing distance from antenna to the EUT was 3 meters.
The other condition as following manner:

a. The field strength level was 3V/m.
b. The frequency range is swept from 80 MHz to 1000 MHz, with the signal 80%amplitude modulated with a 1kHz sine wave. The rate of sweep did not exceed 1.5x 10-3 decade/s. Where the frequency range is swept incrementally, the step size was 1% of fundamental.
c. The dwell time at each frequency shall be not less than the time necessary for the EUT to be able to respond.
d. The test was performed with the EUT exposed to both vertically and horizontally polarized fields on each of the four sides.
e. For the actual test configuration, please refer to the related Item –EUT Test Photos.

4.5.4 DEVIATION FROM TEST STANDARD

No deviation

4.5.5 TEST SETUP

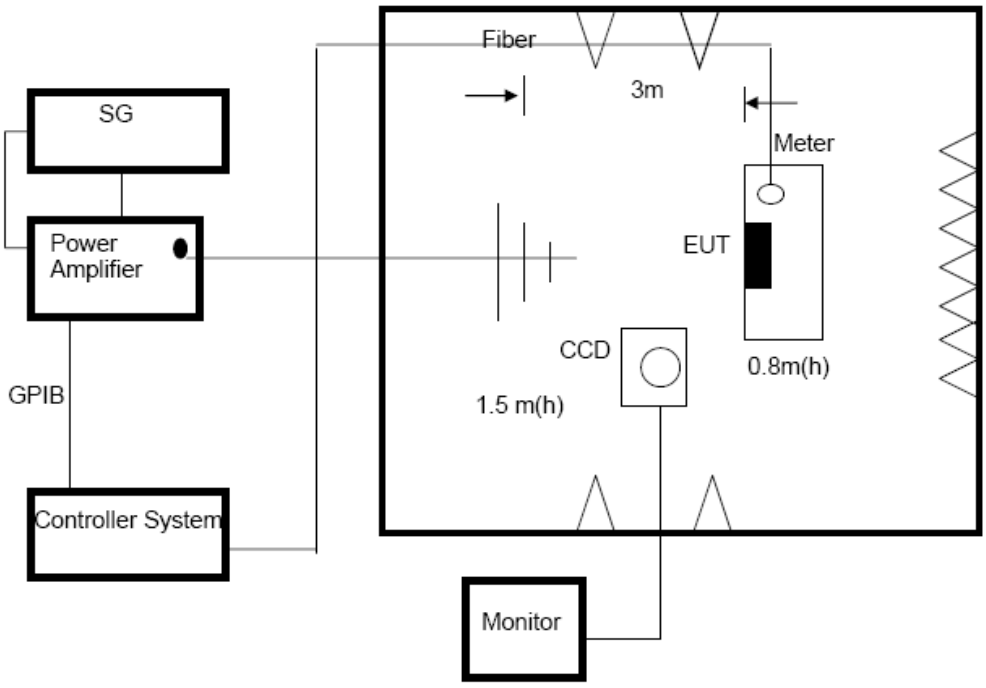

Note:

TABLE-TOP EQUIPMENT

The EUT installed in a representative system as described in section 7 of IEC/EN 61000-4-3 was placed on a non-conductive table 0.8 meters in height. The system under test was connected to the power and signal wire according to relevant installation instructions.

FLOOR-STANDING EQUIPMENT

The EUT installed in a representative system as described in section 7 of IEC/EN 61000-4-3 was placed on a non-conductive wood support 0.1 meters in height. The system under test was connected to the power and signal wire according to relevant installation instructions.

4.5.6 TEST RESULTS

EUT：	Work light	Model No.:	W4R Work (502733RWL0)
Temperature：	23.1℃	Relative Humidity：	51.5%
Pressure：	1008 hPa	Test Power ：	Battery 3.7V
Test Engineer：	Rock	Test Date：	2022-10-11
Test Mode ：	1.Max Lighting 2. Min Lighting		

Frequency Range (MHz)	RF Field Position	R.F. Field Strength	Azimuth	Perform. Criteria	Results	Judgment
80MHz - 1000MHz	H / V	3 V/m (rms) AM Modulated 1000Hz, 80%	0	A	A	PASS
			90			
			180			
			270			

Note:

1) N/A - denotes test is not applicable in this test report.
2) Criteria A: There was no change operated with initial operating during the test.
3) Criteria B: The EUT function loss during the test, but self-recoverable after the test.
4) Criteria C: The system shut down during the test.

4.6 EFT/BURST TESTING

4.6.1 TEST SPECIFICATION

Basic Standard:	IEC/EN 61000-4-4
Required Performance	B
Test Voltage:	Power Line：1 kV Signal/Control Line：0.5 KV
Polarity:	Positive & Negative
Impulse Frequency:	5 kHz
Impulse Wave shape :	5/50 ns
Burst Duration:	15 ms
Burst Period:	300 ms
Test Duration:	Not less than 2 min.

4.6.2 MEASUREMENT INSTRUMENTS

Item	Instr.Code	Kind of Equipment	Manufacturer	Type No.	Serial No.	Calibrated until
1	AN-E032	Electrical Intelligent Transient Generator	Everfine	EMBZ015A-300050-AG, BZ015A-096130-AG1000-4B	G114921CA1341115	2023-05-12

Remark: ” N/A” denotes No Model No. / Serial No. and No Calibration specified.

4.6.3 TEST PROCEDURE

The EUT and support equipment, are placed on a table that is 0.8 meter above a metal ground plane measured 1m*1m min. and 0.65mm thick min.
The other condition as following manner:

a. The length of power cord between the coupling device and the EUT should not exceed 1 meter.
b. Both positive and negative polarity discharges were applied.
c. The duration time of each test sequential was 1 minute
d. For the actual test configuration, please refer to the related Item –EUT Test Photos.

4.6.4 DEVIATION FROM TEST STANDARD

No deviation

4.6.5 TEST SETUP

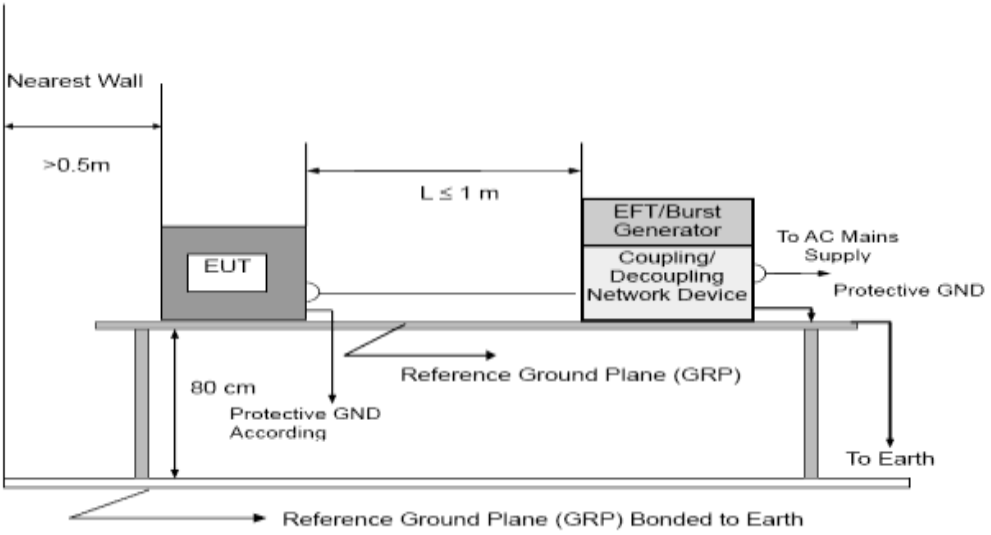

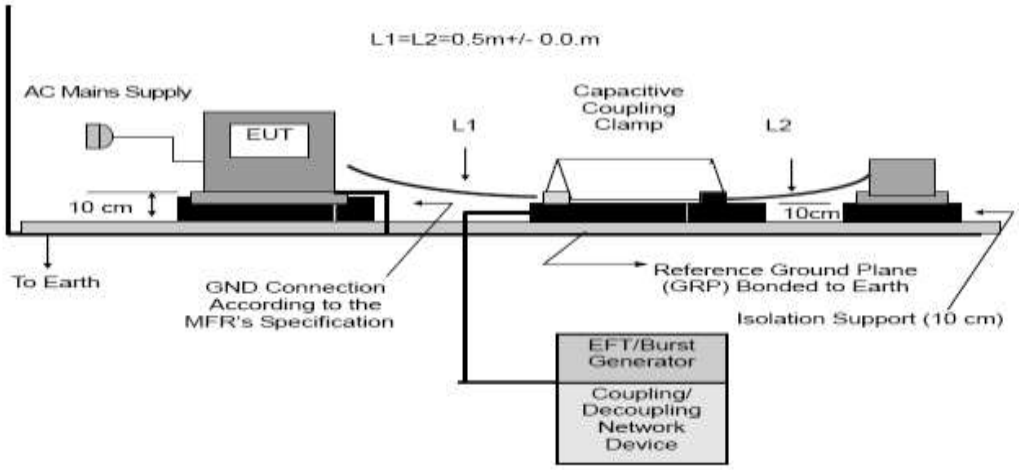

Note:

TABLE-TOP EQUIPMENT

The configuration consisted of a wooden table (0.8m high) standing on the Ground Reference Plane. The GRP consisted of a sheet of aluminum (at least 0.25mm thick and 2.5m square) connected to the protective grounding system. A minimum distance of 0.5m was provided between the EUT and the walls of the laboratory or any other metallic structure.

FLOOR-STANDING EQUIPMENT

The EUT installed in a representative system as described in section 7 of IEC/EN 61000-4-4 and its cables, were isolated from the Ground Reference Plane by an insulating support that is 0.1-meter thick. The GRP consisted of a sheet of aluminum (at least 0.25mm thick and 2.5m square) connected to the protective grounding system.

4.6.6 TEST RESULTS

EUT:	/	Model No.:	/
Temperature:	/	Relative Humidity:	/
Pressure:	/	Test Power :	/
Test Engineer:	/	Test Date:	/
Test Mode :	/		

Mode	(**X**) AC Power Line		( ) DC Power Line		( ) Signal/Control Line	
Test Level	1KV		0.5KV		0.5KV	
Port(s)	Polarity	Results	Polarity	Results	Polarity	Results
Line (L)	P		P		P	
	N		N		N	
Neutral (N)	P		P		P	
	N		N		N	
Ground (PE)	P		P		P	
	N		N		N	
Signal/Control Line	P		P		P	
	N		N		N	
Criteria	**B**		**B**		**B**	
Result	**--**		**--**		**--**	
Judgment	**N/A**		**N/A**		**N/A**	

Note:

1) P/N denotes the Positive/Negative polarity of the output voltage.

2) N/A - denotes test is not applicable in this test report

3) Criteria A: There was no change operated with initial operating during the test.

4) Criteria B: The EUT function loss during the test, but self-recoverable after the test.

5) Criteria C: The system shut down during the test.

4.7 SURGE TESTING

4.7.1 TEST SPECIFICATION

Basic Standard:	IEC/EN 61000-4-5
Required Performance	C
Wave-Shape:	Combination Wave 1.2/50 us Open Circuit Voltage 8 /20 us Short Circuit Current
Test Voltage:	Power Line：±0.5KV,±1 KV, ±2KV, ±4KV,
Surge Input/Output:	L-N
Generator Source:	2 ohm between networks
Impedance:	12 ohm between network and ground
Polarity:	Positive/Negative
Phase Angle:	90/270
Pulse Repetition Rate:	1 time / min. (maximum)
Number of Tests:	5 positive at 90 and 5 negative at 270

4.7.2 MEASUREMENT INSTRUMENTS

Item	Instr.Code	Kind of Equipment	Manufacturer	Type No.	Serial No.	Calibrated until
1	AN-E054	Immunity Teat System	EMC PARTNER	IMU3000 S-T	105684-2060	2023-05-12
2	AN-E055	Signal line coupled decoupling network	EMC PARTNER	CDN-UTP8 ED3	1558	2023-05-12

Remark: ” N/A” denotes No Model No. / Serial No. and No Calibration specified.

4.7.3 TEST PROCEDURE

a. For test applied to unshielded unsymmetrically operated interconnection lines of EUT:
The surge is applied to the lines via the capacitive coupling. The coupling /decoupling networks shall not influence the specified functional conditions of the EUT. The interconnection line between the EUT and the coupling/decoupling networks shall be 2 meters in length (or shorter).

b. For test applied to unshielded symmetrically operated interconnection /telecommunication lines of EUT:
The surge is applied to the lines via gas arrestors coupling. Test levels below the ignition point of the coupling arrestor cannot be specified. The interconnection line between the EUT and the coupling/decoupling networks shall be 2 meters in length (or shorter).

c. For the actual test configuration, please refer to the related Item –EUT Test Photos.

4.7.4 DEVIATION FROM TEST STANDARD

No deviation

4.7.5 TEST SETUP

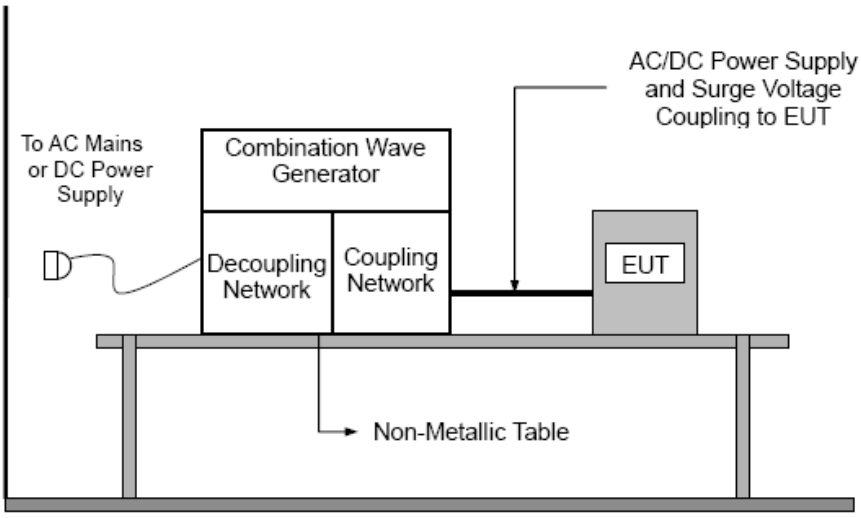

4.7.6 TEST RESULTS

EUT：	/	Model No.:	/
Temperature：	/	Relative Humidity：	/
Pressure：	/	Test Power ：	/
Test Engineer：	/	Test Date：	/
Test Mode ：	/		

Wave Form	**1.2/50(8/20)Ti/Th us**						**Criteria**	**Judgment**
EUT Ports Tested	**Polarity**	**Phase**	**Voltage**					
			0.5kV	**1kV**	**2kV**	**4kV**		
L - N	+/-	0°	--	--	--	--	**C**	**N/A**
	+	90°	--	--	--	--		
	+/-	180°	--	--	--	--		
	-	270°	--	--	--	--		
L - PE	+/-	0°	--	--	--	--	**C**	**N/A**
	+	90°	--	--	--	--		
	+/-	180°	--	--	--	--		
	-	270°	--	--	--	--		
N - PE	+/-	0°	--	--	--	--	**C**	**N/A**
	+	90°	--	--	--	--		
	+/-	180°	--	--	--	--		
	-	270°	--	--	--	--		

Note:

1) P/N denotes the Positive/Negative polarity of the output voltage.
2) Polarity and Numbers of Impulses：5 Pst / Ngt at each tested mode
3) N/A - denotes test is not applicable in this Test Report
4) All voltages of the lower levels shall be satisfied

4.8 INJECTION CURRENT TESTING

4.8.1 TEST SPECIFICATION

Basic Standard:	IEC/EN 61000-4-6
Required Performance	A
Frequency Range:	0.15 MHz - 80 MHz
Field Strength:	3 Vr.m.s.
Modulation:	1kHz Sine Wave, 80%, AM Modulation
Frequency Step:	1 % of fundamental
Dwell Time:	at least 3 seconds

4.8.2 MEASUREMENT INSTRUMENTS

Item	Kind of Equipment	Manufacturer	Type No.	Serial No.	Calibrated until
1	CONDUCTED IMMUNITY TEST SYSTEM	FRANKONIA	CIT10-75	102D1253	2023-05-29
2	CDN	FRANKONIA	CDN M2+M3	A3011059	2023-07-25
3	Electromagnetic clamp	FRANKONIA	KEMZ-801	21044	2023-07-25

Remark: ” N/A” denotes No Model No. / Serial No. and No Calibration specified.

4.8.3 TEST PROCEDURE

The EUT and support equipment, are placed on a table that is 0.8 meter above a metal ground plane measured 1m*1m min. and 0.65mm thick min.
The other condition as following manner:

a. The field strength level was 3V.
b. The frequency range is swept from 150 KHz to 80 MHz, with the signal 80%amplitude modulated with a 1kHz sine wave. The rate of sweep did not exceed 1.5x 10-3 decade/s. Where the frequency range is swept incrementally, the step size was 1% of fundamental.
c. The dwell time at each frequency shall be not less than the time necessary for the EUT to be able to respond.
d. For the actual test configuration, please refer to the related Item –EUT Test Photos.

4.8.4 DEVIATION FROM TEST STANDARD

No deviation

4.8.5 TEST SETUP

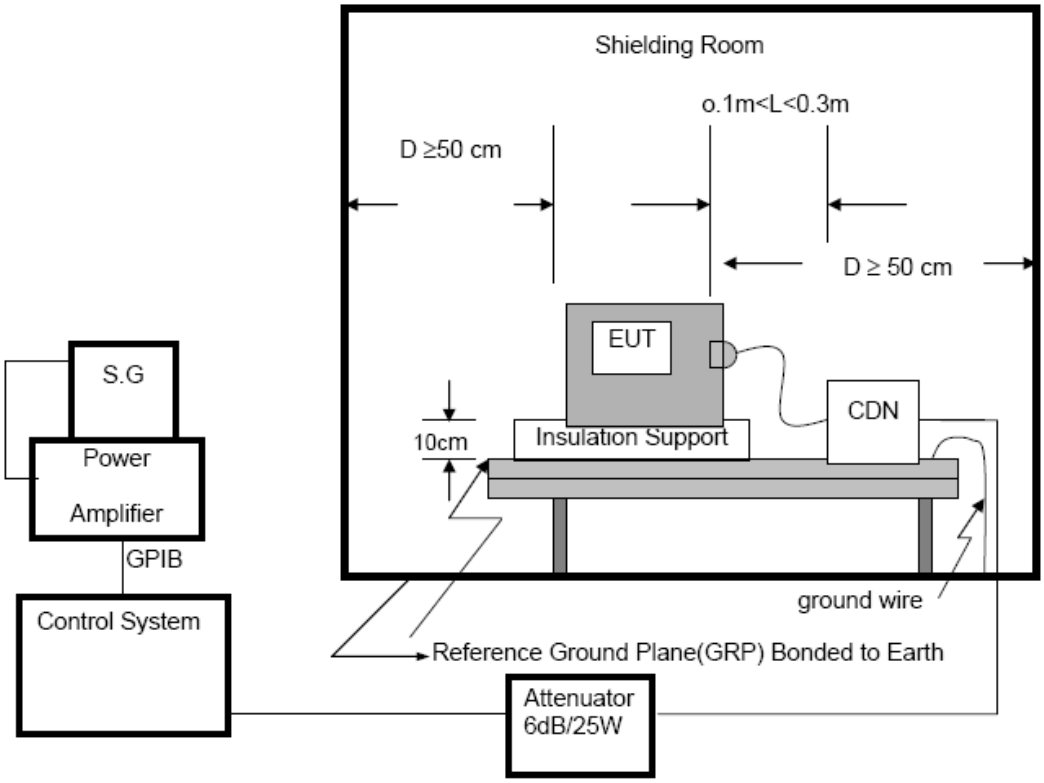

For the actual test configuration, please refer to the related Item –EUT Test Photos.

NOTE:

FLOOR-STANDING EQUIPMENT

The equipment to be tested is placed on an insulating support of 0.1 meters height above a ground reference plane. All relevant cables shall be provided with the appropriate coupling and decoupling devices at a distance between 0.1 meters and 0.3 meters from the projected geometry of the EUT on the ground reference plane.

4.8.6 TEST RESULTS

EUT：	/	Model No.:	/
Temperature：	/	Relative Humidity：	/
Pressure：	/	Test Power ：	/
Test Engineer：	/	Test Date：	/
Test Mode ：	/		

Test Ports (Mode)	Freq. Range MHz)	Field Strength	Perform. Criteria	Results	Judgment
Input/ Output AC. Power Port	0.15 ---80	3V(rms) AM Modulated 1000Hz, 80%	**A**	**--**	**N/A**
Input/ Output DC. Power Port	0.15 --- 80		**A**	**--**	**N/A**
Signal Line (N/A)	0.15 --- 80		**A**	**--**	**N/A**

Note:

1) N/A - denotes test is not applicable in this Test Report.

4.9 VOLTAGE INTERRUPTION/DIPS TESTING

4.9.1 TEST SPECIFICATION

Basic Standard:	IEC/EN 61000-4-11
Required Performance**:**	C (For 30% Voltage Dips) B (For 100% Voltage Interruptions)
Test Duration Time:	Minimum three test events in sequence
Interval between Event:	Minimum ten seconds
Phase Angle:	0°-360°
Test Cycle:	3 times

4.9.2 MEASUREMENT INSTRUMENTS

Item	Instr.Code	Kind of Equipment	Manufacturer	Type No.	Serial No.	Calibrated until
1	AN-E031	Voltage Dips And Interruptions Generator	Everfine	EMBZ015A-300050-AG, BZ015A-096130-AG1000-11K	G113317CA8341117	2023-05-12

Remark: ” N/A” denotes No Model No. / Serial No. and No Calibration specified.

4.9.3 TEST PROCEDURE

The EUT shall be tested for each selected combination of test levels and duration with a sequence of three dips/interruptions with intervals of 10 s minimum (between each test event). Each representative mode of operation shall be tested. Abrupt changes in supply voltage shall occur at zero crossings of the voltage waveform.

4.9.4 DEVIATION FROM TEST STANDARD

No deviation

4.9.5 TEST SETUP

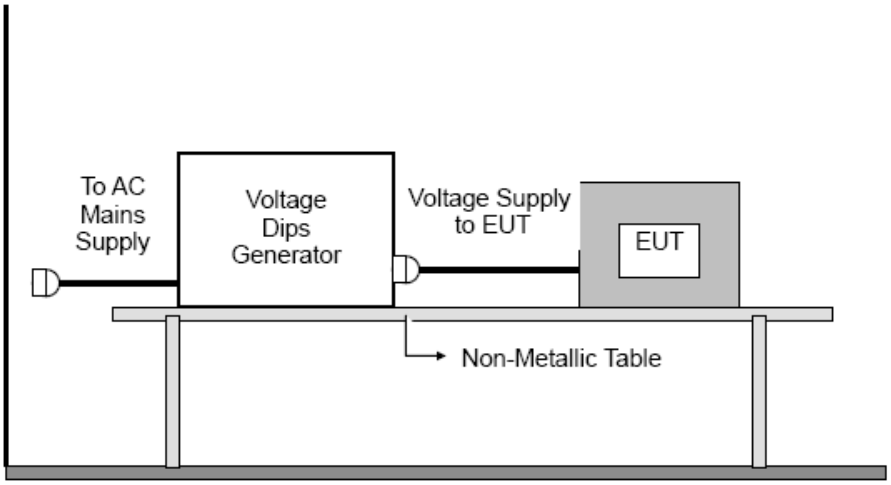

For the actual test configuration, please refer to the related Item –EUT Test Photos.

4.9.6 TEST RESULTS

EUT:	/	Model No.:	/
Temperature:	/	Relative Humidity:	/
Pressure:	/	Test Power :	/
Test Engineer:	/	Test Date:	/
Test Mode :	/		

Test Power: 230Vac, 50Hz

Voltage Reduction	**Periods**	**Perform Criteria**	**Results**	**Judgment**
Voltage dip 30%	10	**C**	**--**	**N/A**
Interruption100%	0.5	**B**	**--**	**N/A**

Note:

1). N/A - denotes test is not applicable in this test report.

4.10 POWER-FREQUENCY MAGNETIC FILDS

4.10.1 MEASUREMENT INSTRUMENTS

Item	Kind of Equipment	Manufacturer	Type No.	Serial No.	Calibrated until
1	Magnetic Field Tester	EMC-PARTNER	MF1000-1	121	2023-05-12

Remark: ” N/A” denotes No Model No. / Serial No. and No Calibration specified.

4.10.2 TEST LEVEL AND PERFORMANCE CRITERION

Level	Magnetic Field Strength A/m	Performance criterion
2	3	A

.

4.10.3 TEST PROCEDURE

The EUT shall be subjected to the test magnetic field by using the induction coil of standard dimensions (1m*1m) and shown in Section 13.3 The induction coil shall then be rotated by 90 ein order to expose the EUT to the test field with different orientations. .

4.10.4 DEVIATION FROM TEST STANDARD

No deviation

4.10.5 TEST SETUP

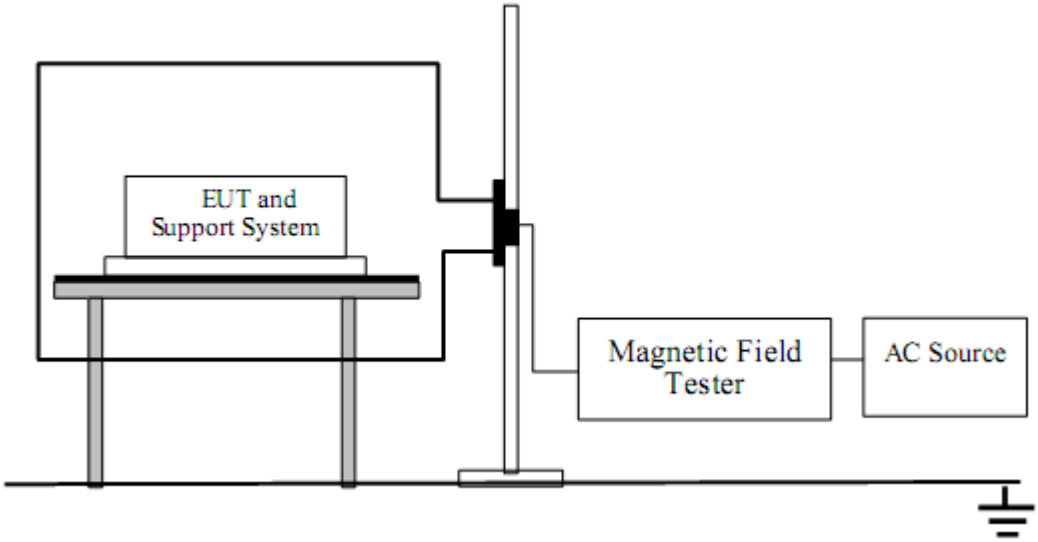

4.10.6 TEST RESULTS

EUT:	/	Model No.:	/
Temperature:	/	Relative Humidity:	/
Pressure:	/	Test Power :	/
Test Engineer:	/	Test Date:	/
Test Mode :	/		

Operation Mode	Test Level	Testing Duration	Coil Orientation	Required	Observation	Result (Pass/Fail)
Lighting	3A/m	5 min / coil	**X**	**A**	**N/A**	**N/A**
	3A/m	5 min / coil	**Y**	**A**	**N/A**	**N/A**
	3A/m	5 min / coil	**Z**	**A**	**N/A**	**N/A**

Note:

Operation as intend, no loss of function during test and after test

5. ATTACHMENT

5.1 EUT TEST PHOTO

Radiated Measurement Photo

Magnetic Emission Measurement Photo

ESD Measurement Photo

5.2 EUT PHOTO

Figure 1. Overall view of unit

Figure 2. Overall view of unit

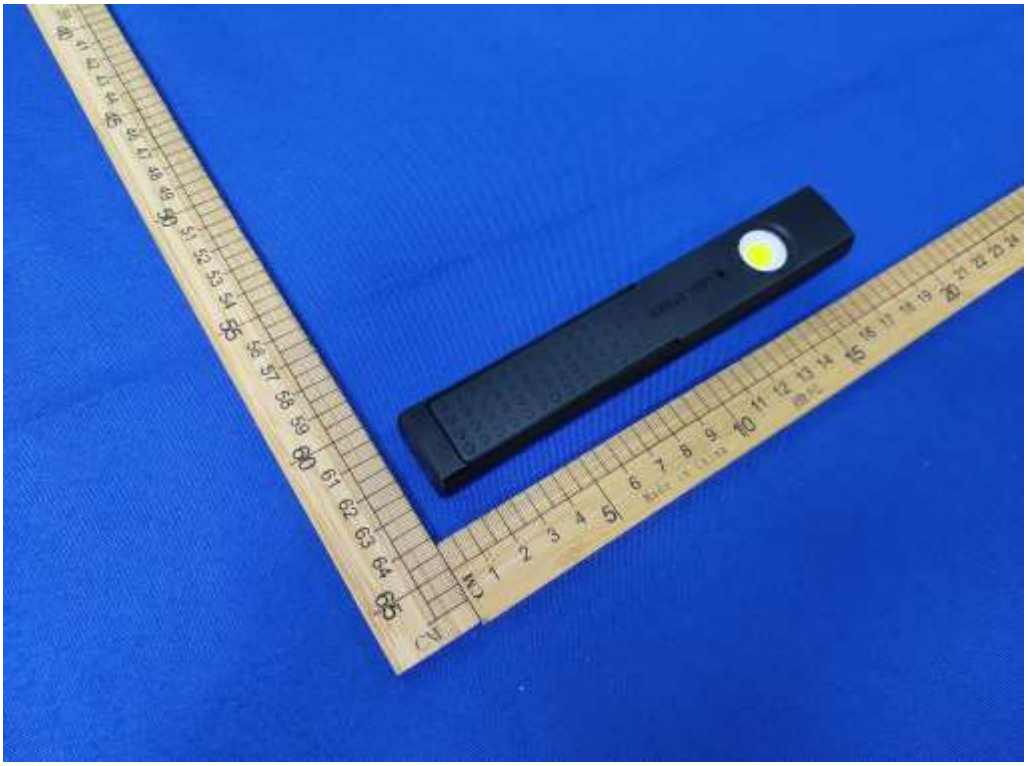

Figure 3. Overall view of unit

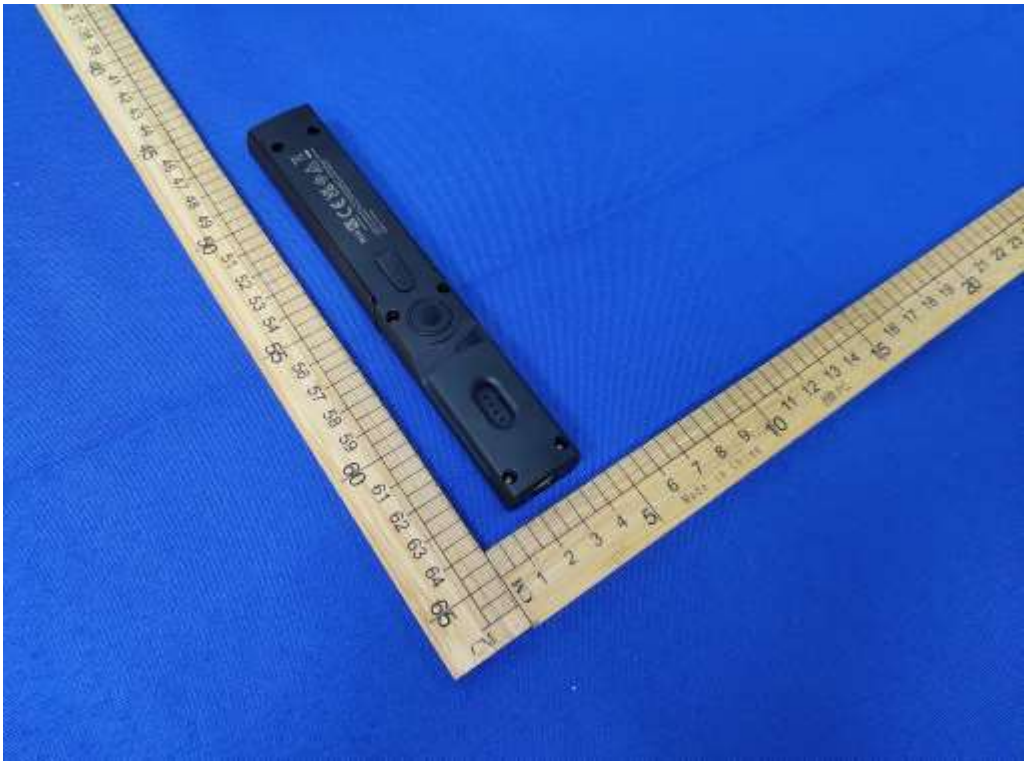

Figure 4. Overall view of unit

Figure 5. Internal view of unit

Figure 6. Internal view of unit

Figure 7. Internal Battery view of unit

Figure 8. Top view of PCB

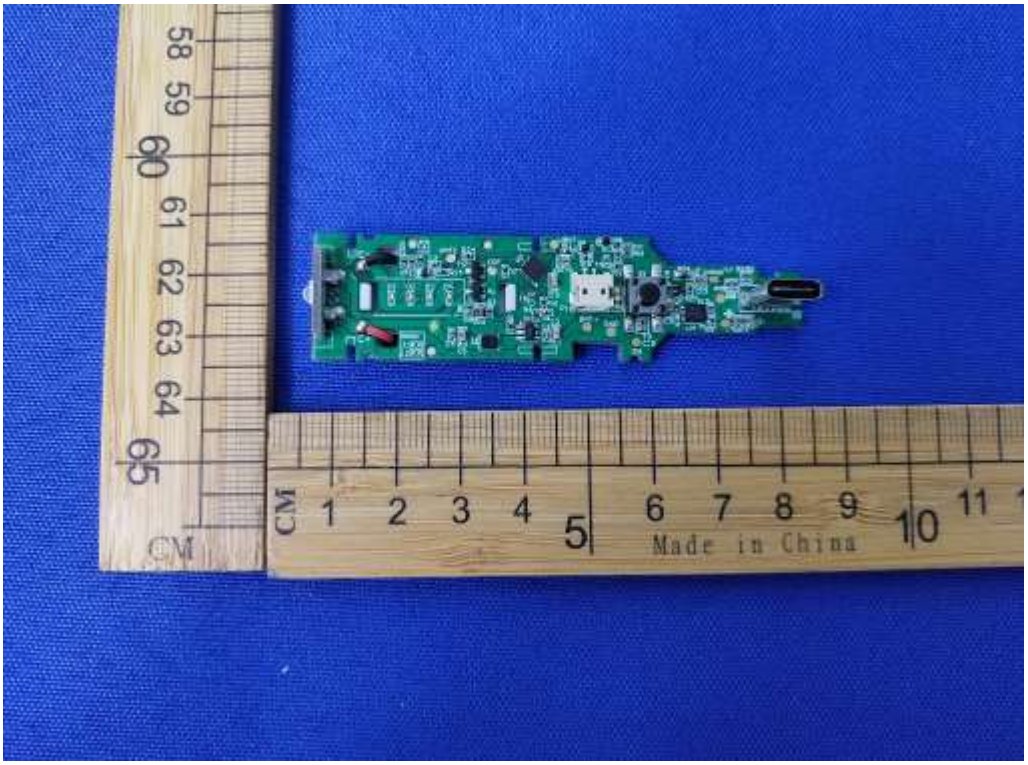

Figure 9. Bottom view of PCB

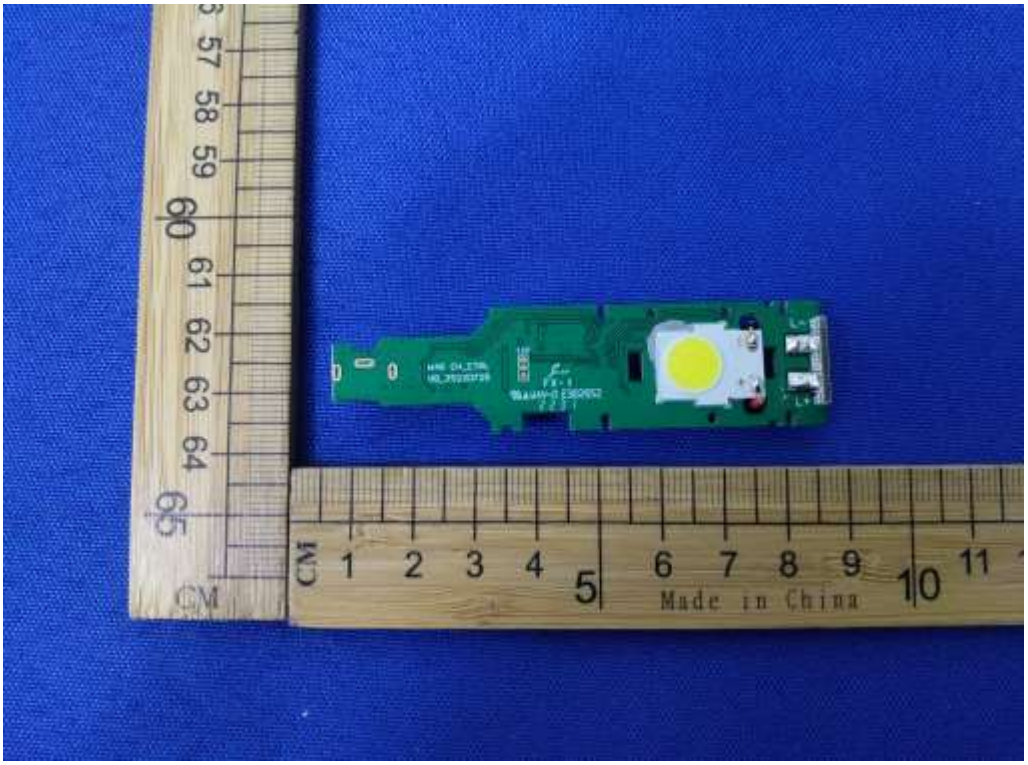

--- End of Report ---