OBJ_DOKU-41583-001.fm Page 1 Wednesday, August 27, 2014 1:02 PM

GDE 230 Professional

FC-T | FC-S

Robert Bosch GmbH
Power Tools Division
70764 Leinfelden-Echterdingen
GERMANY
www.bosch-pt.com

1 609 92A 0T8 (2014.08) PS / 2 **XXX**

1 609 92A 0T8

BOSCH

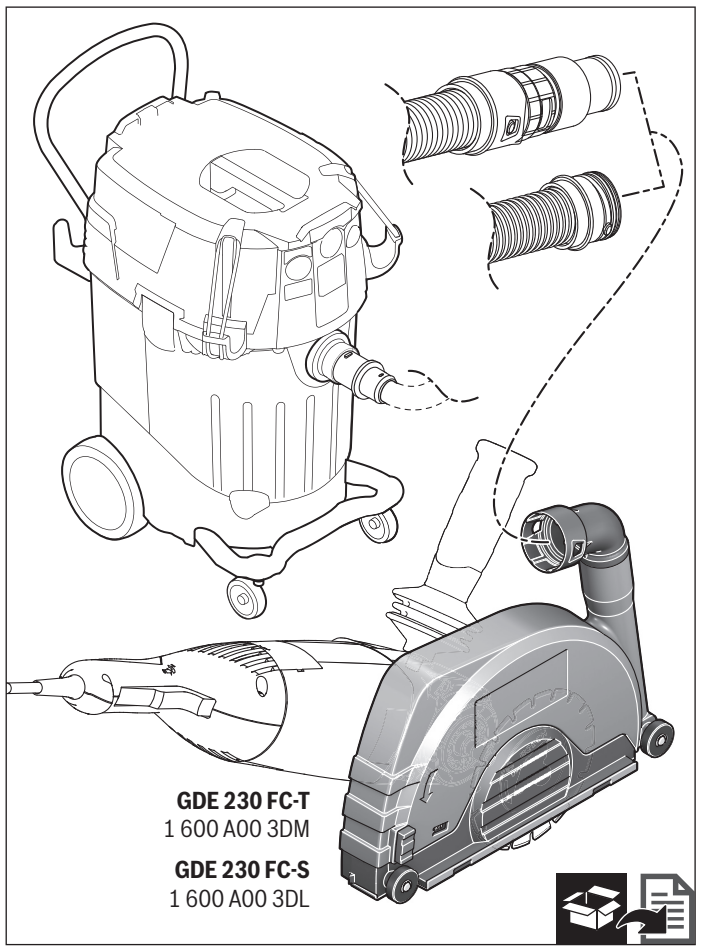

GDE 230 FC-T
1 600 A00 3DM

GDE 230 FC-S
1 600 A00 3DL

		GDE 230 FC-T	GDE 230 FC-S
∅	mm	230	230
max.	mm	60	60
		2 605 510 281	2 605 510 298
	kg	2,1	2,1

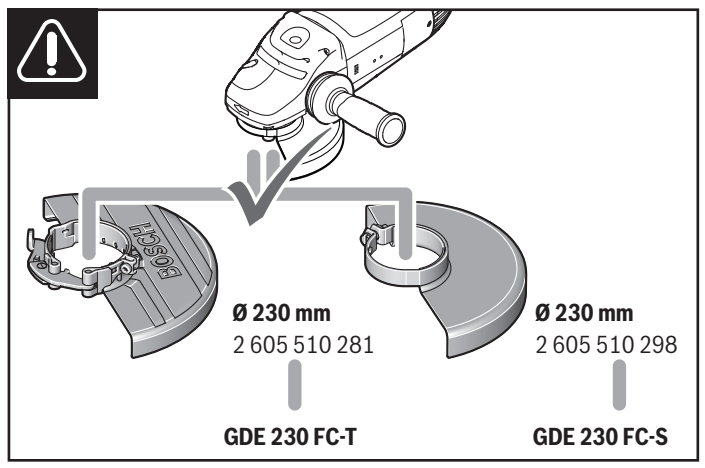

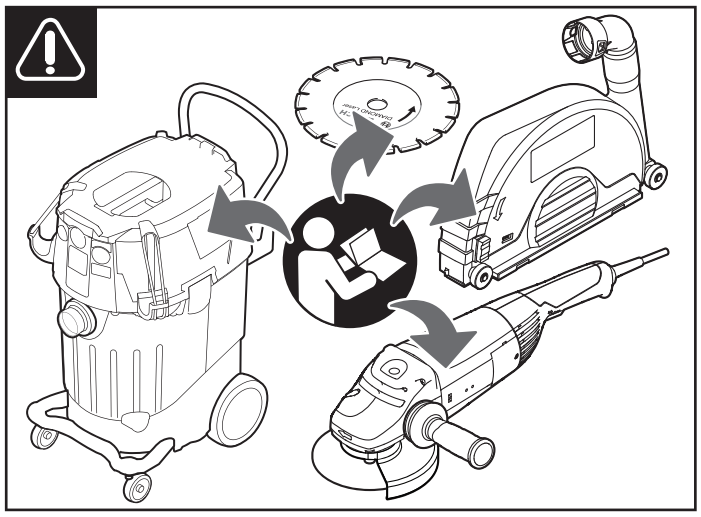

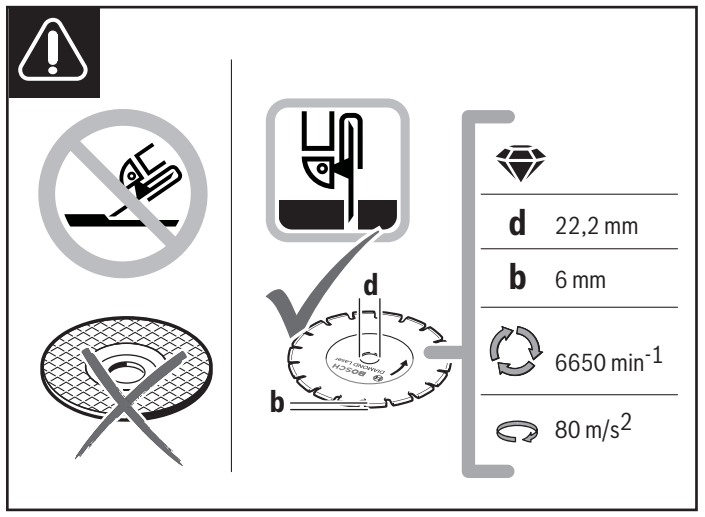



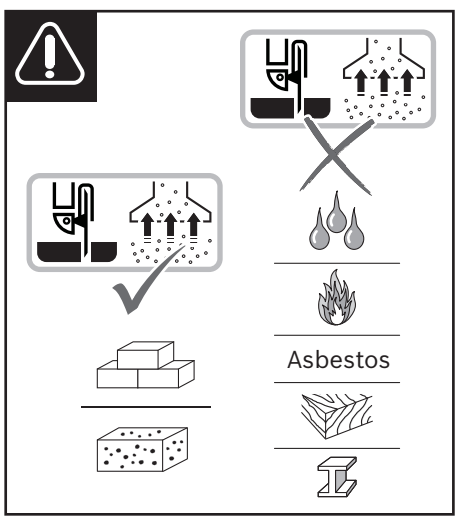

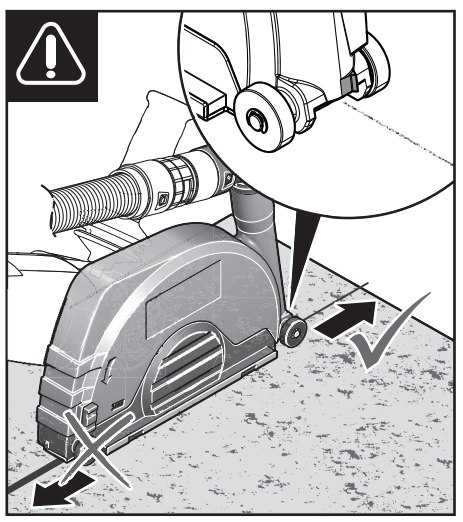

OBJ_DOKU-41583-001.fm Page 2 Wednesday, August 27, 2014 1:02 PM

