Oras

Installation and maintenance guide

4-5

6-11

12

13-21

22

Oras App

Download on the App Store

GET IT ON Google Play

apps.oras.com

Apple and the Apple logo are trademarks of Apple Inc., registered in the U.S. and other countries. App Store is a service mark of Apple Inc., registered in the U.S. and other countries.

Google Play and the Google Play logo are trademarks of Google Inc.

The Bluetooth® word mark and logos are registered trademarks owned by the Bluetooth SIG, Inc. and any use of such marks by Oras Group is under license. Other trademarks and trade names are those of their respective owners.

I (ISO 3822)
50 - 1000 kPa
max. +70°C

Frequency: 2,4 GHz
Max power: 10 mW
Radio range: 25 m

We declare that the following Bluetooth marked products conform to
the Radio Equipment Directive 2014/53/EU,
the Low Voltage Directive 2014/35/EU,
the EMC Directive 2014/30/EU and
the RoHS Directive 2011/65/EU.
For more information:
https://static.oras.com

5730FZ, 5730FQ

I (ISO 3822)
EN 817, EN 15091
50 - 1000 kPa
0.17 l/s (300 kPa)
195 kPa (0.2 l/s)
max. +70°C

IP 55
9 V
AA 1.5 V Lithium x 2

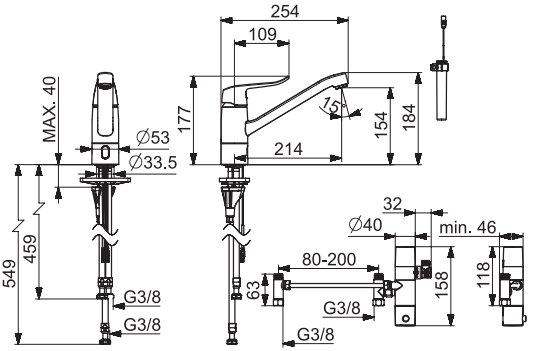

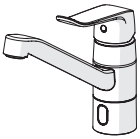

(EMC 2014/53/EU , 2011/65/EU)

mpi.oras.com/5730FZ

5730FTZ

I (ISO 3822)
EN 817, EN 15091
50 - 1000 kPa
0.17 l/s (300 kPa)
195 kPa (0.2 l/s)
max. +70°C

IP 55 / transformer IP 20
230 / 9 V

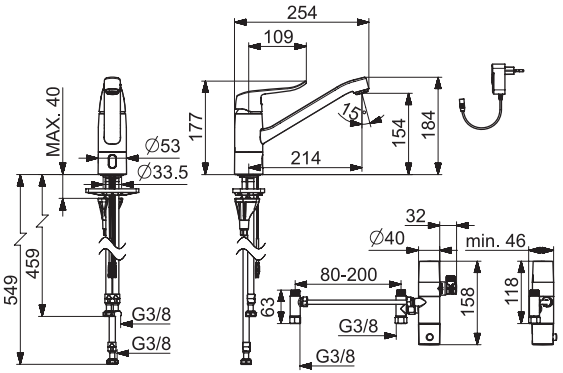

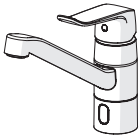

(EMC 2014/53/EU , 2011/65/EU)

mpi.oras.com/5730FTZ

5738FZ, 5738FQ

I (ISO 3822)
EN 817, EN 15091
50 - 1000 kPa
0.17 l/s (300 kPa)
195 kPa (0.2 l/s)
max. +70°C

IP 55
LS17500 A Li-SOCl2 Lithium 3.6V

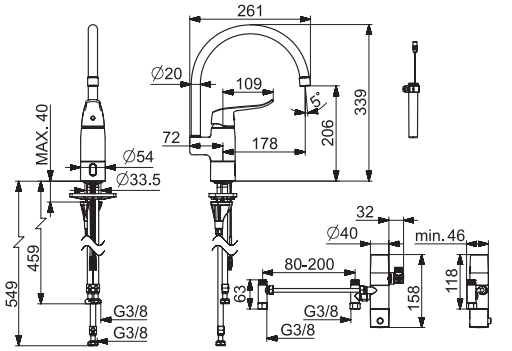

(EMC 2014/53/EU , 2011/65/EU)

mpi.oras.com/5738FZ

5738FTZ

I (ISO 3822)
EN 817, EN 15091
50 - 1000 kPa
0.17 l/s (300 kPa)
195 kPa (0.2 l/s)
max. +70°C

IP 55 / transformer IP 20
230 / 9 V

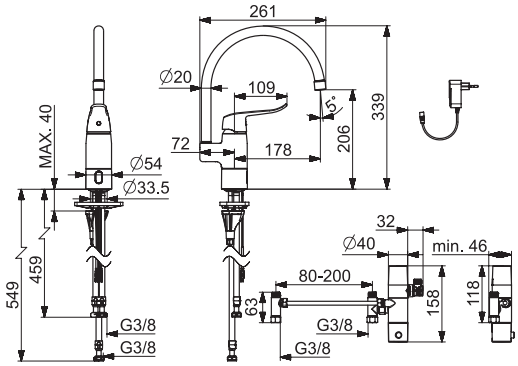

(EMC 2014/53/EU , 2011/65/EU)

mpi.oras.com/5738FTZ

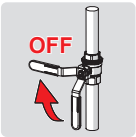

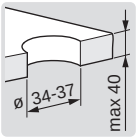

④

max.
1600 kPa

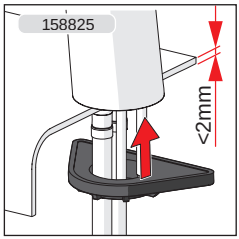

1

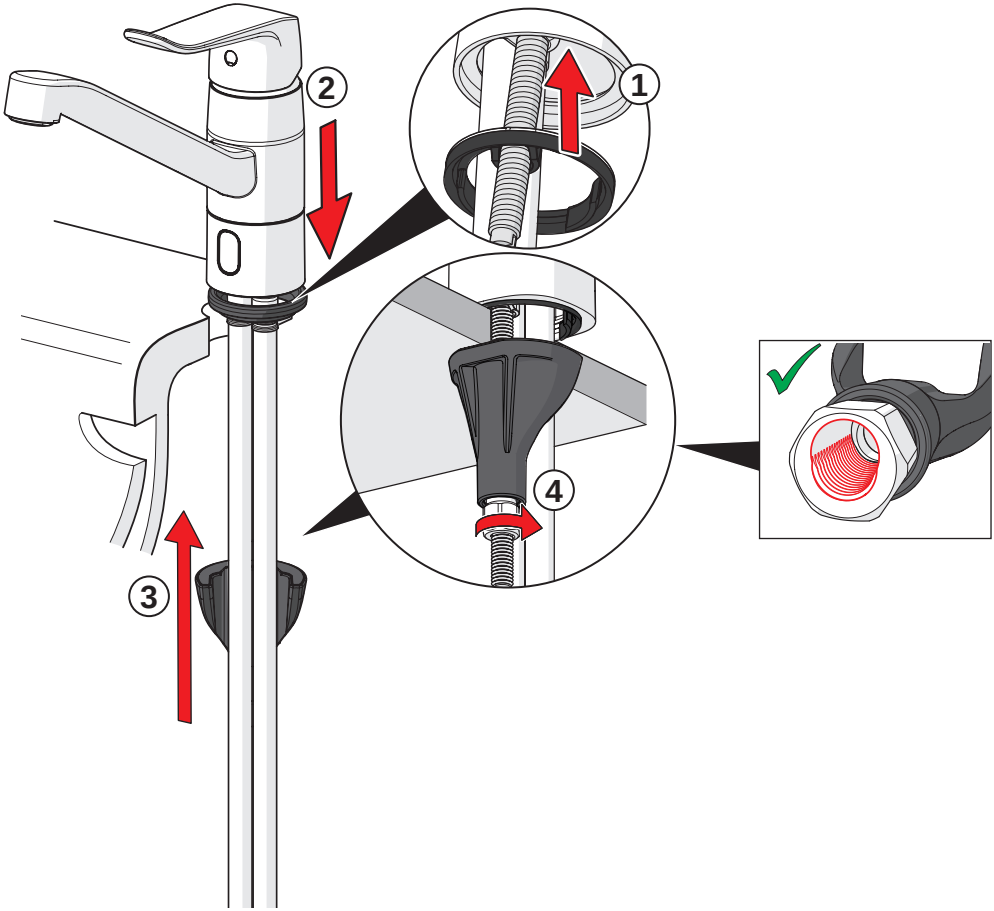

①

③

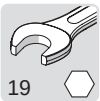

④⑤⑥

⑥

max.
1600 kPa

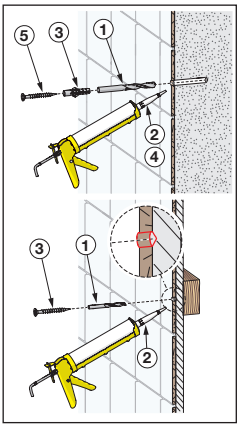

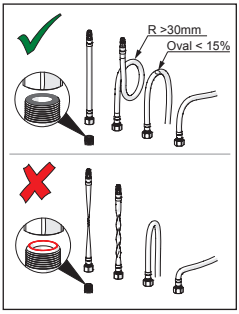

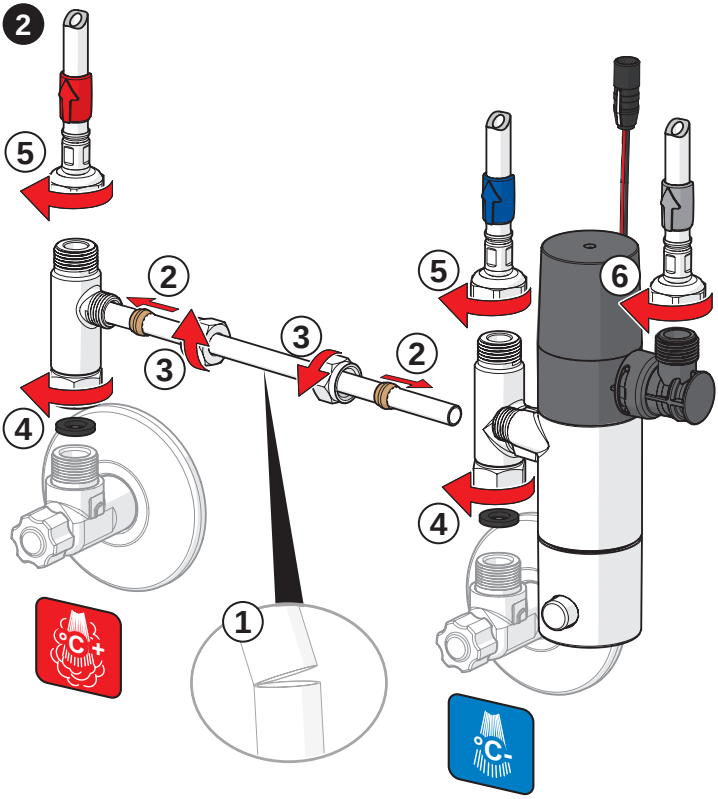

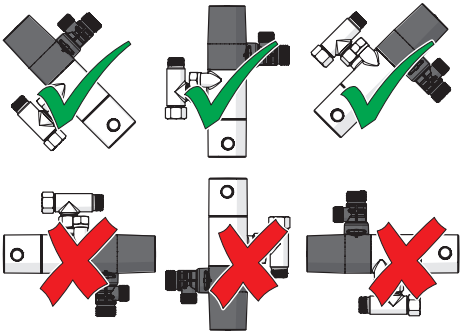

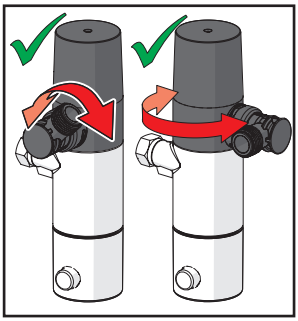

3

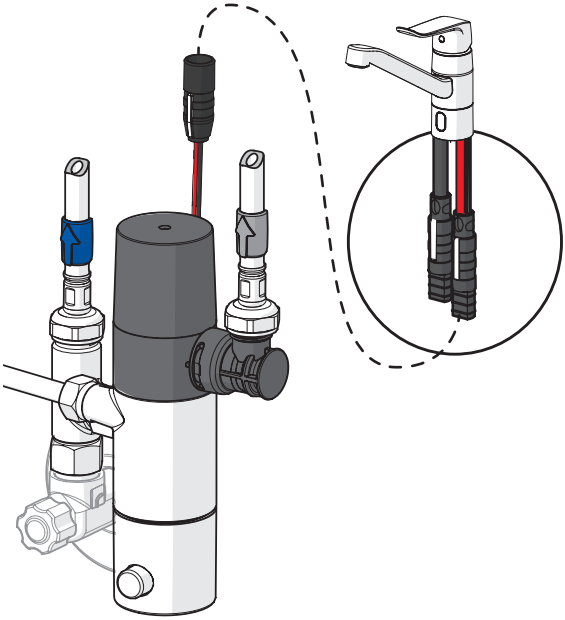

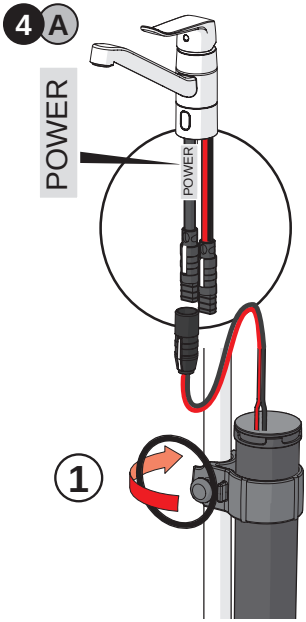
4 A
POWER
POWER
1

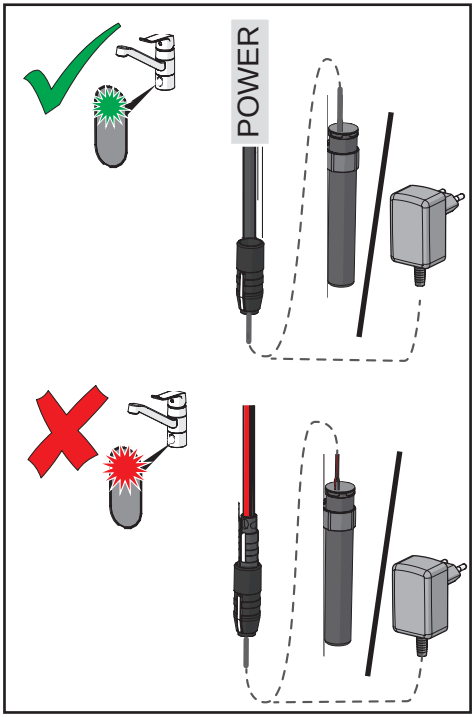
POWER

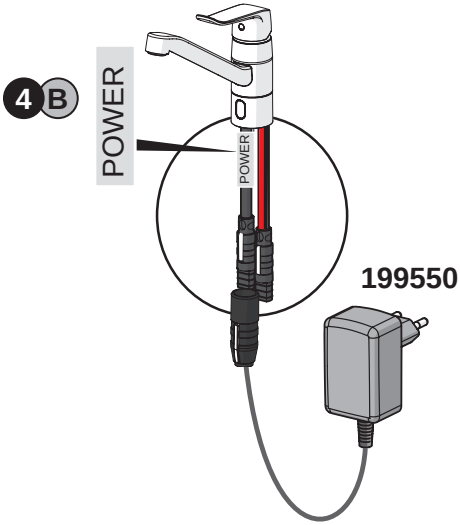
4 B
POWER
POWER
199550

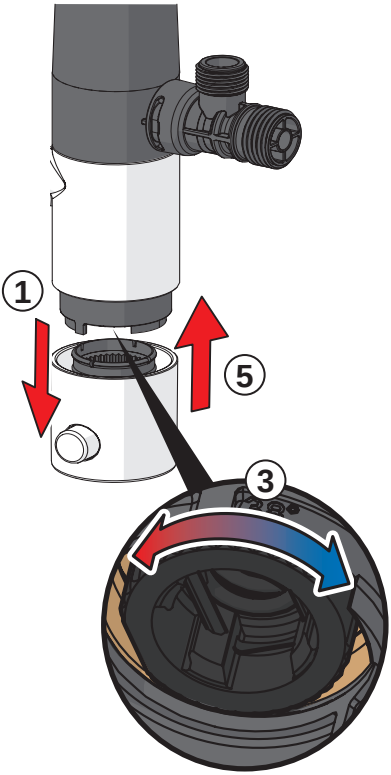
1
5
3

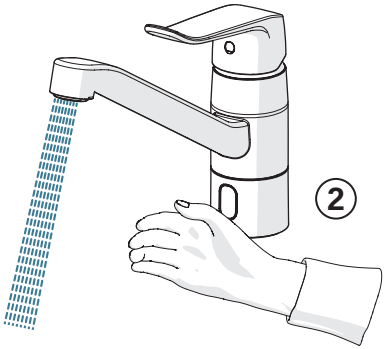
2

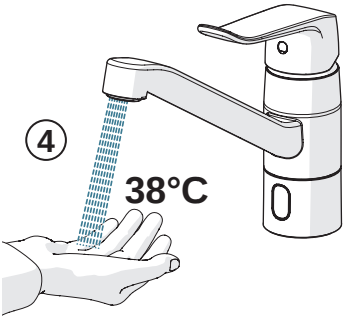
4
38°C

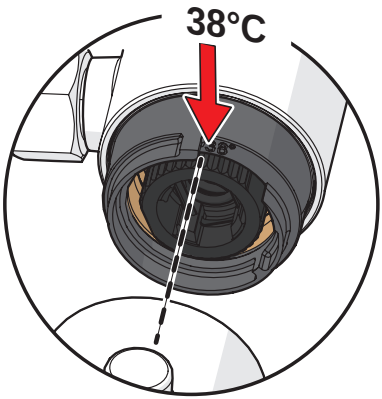
38°C

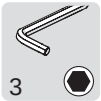
3

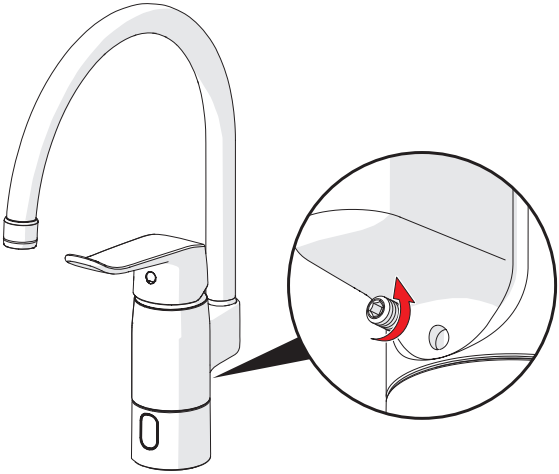

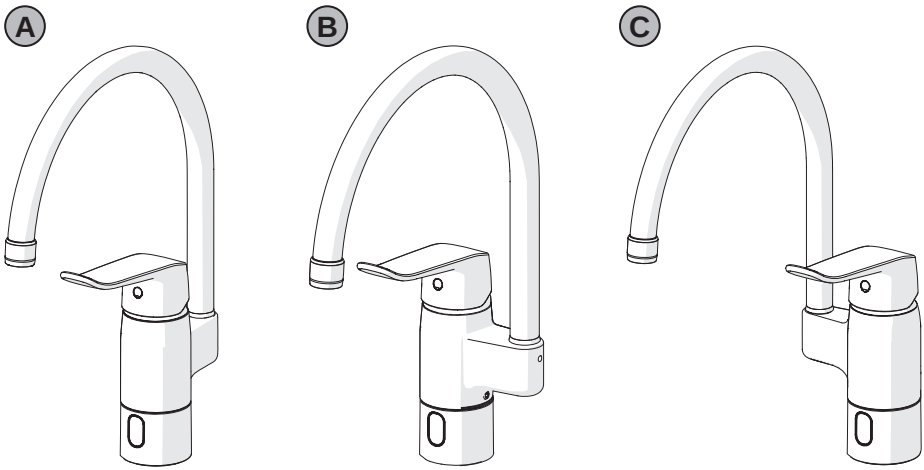
A
B
C

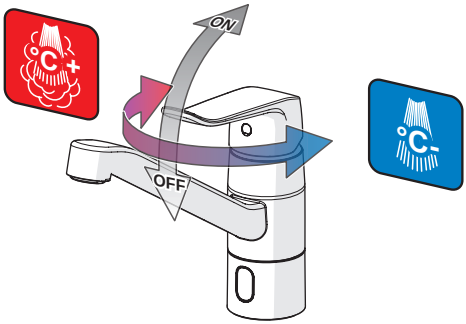

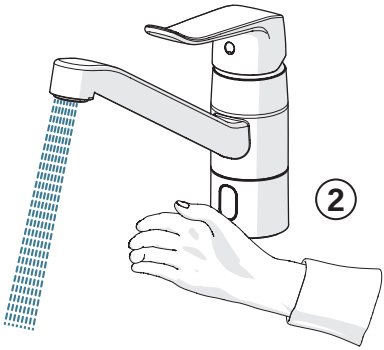

ON 10 s

Bluetooth®

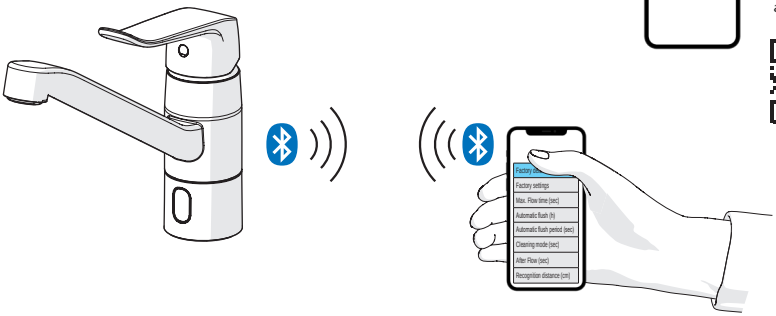

Oras App

Download on the App Store

GET IT ON Google Play

apps.oras.com

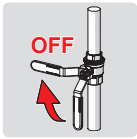

3

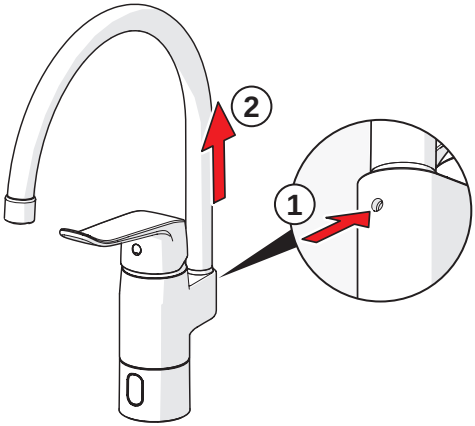

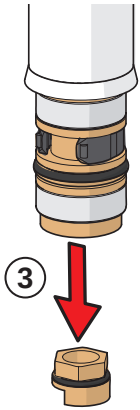

4

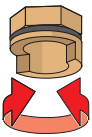

120°

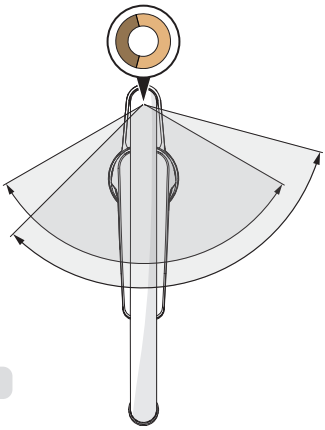

159670/10

4

60°/0°

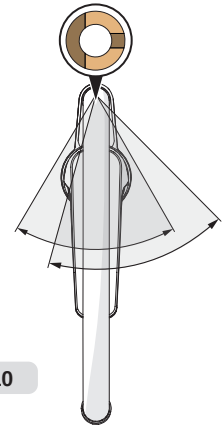

159667/10

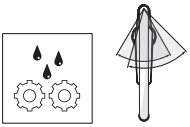

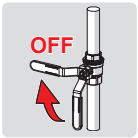

②

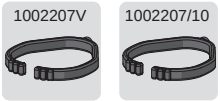

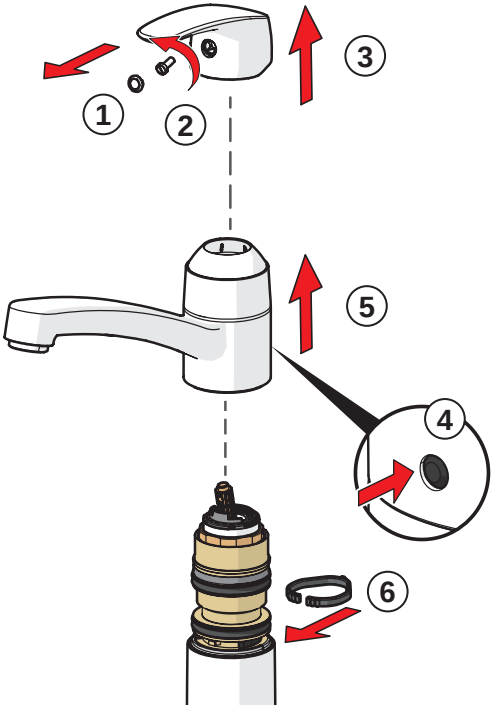

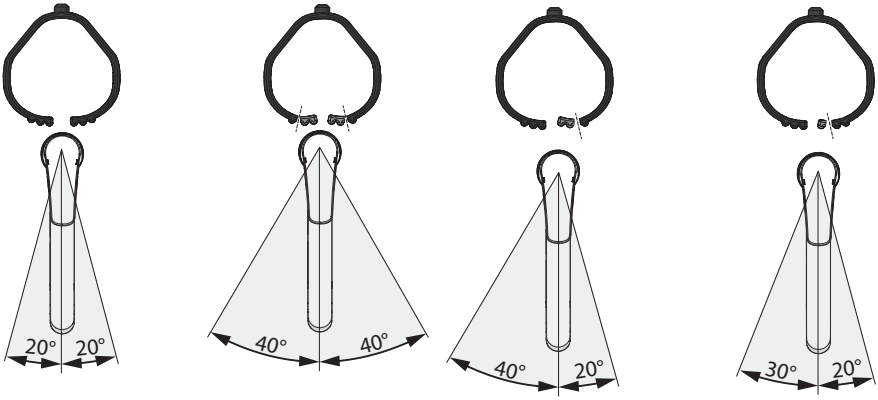

A 1 G 6

G 1

G 2

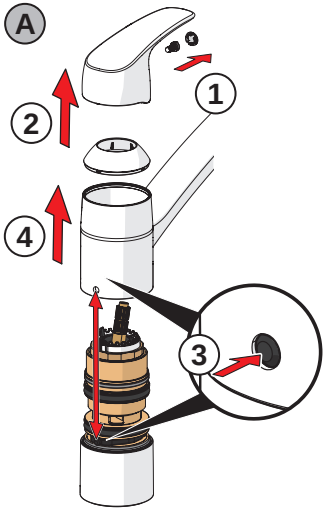

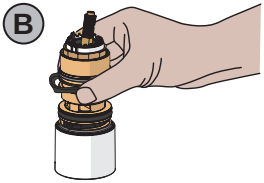

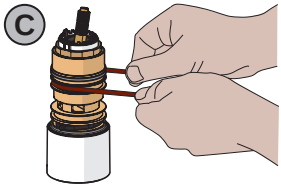

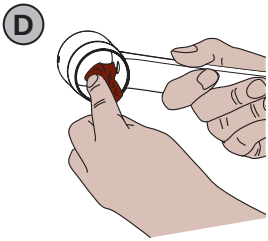

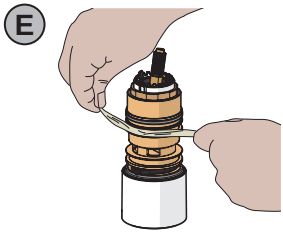

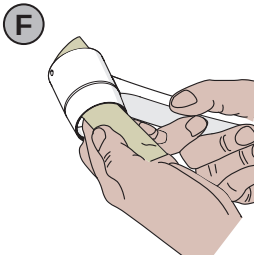

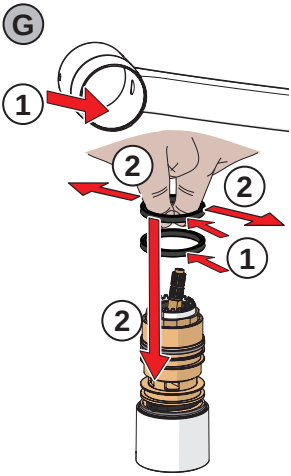

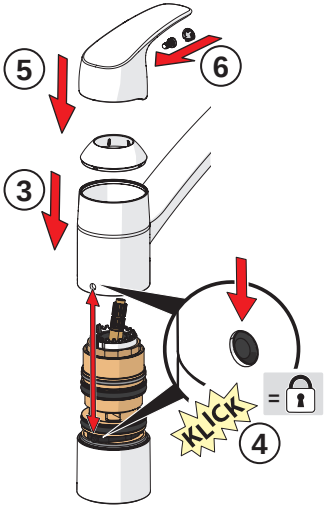

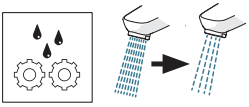

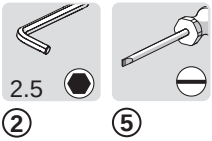
2.5
②
⑤

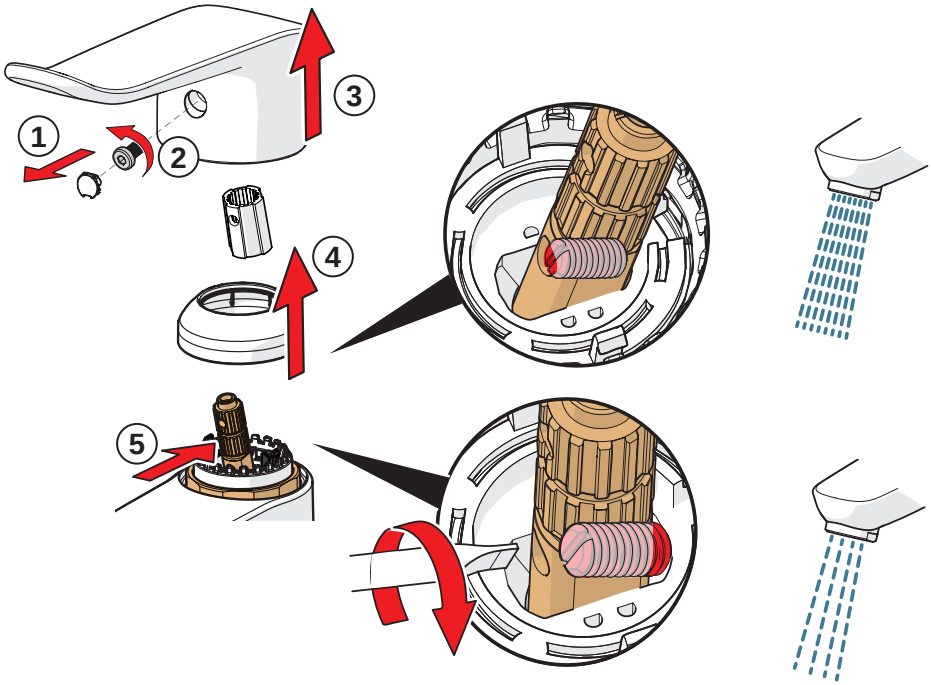
1
2
3
4
5

②

⑤⑥

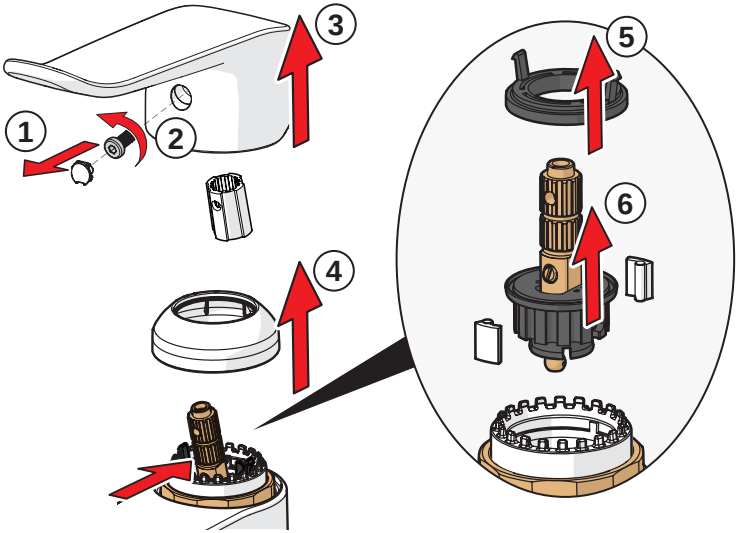

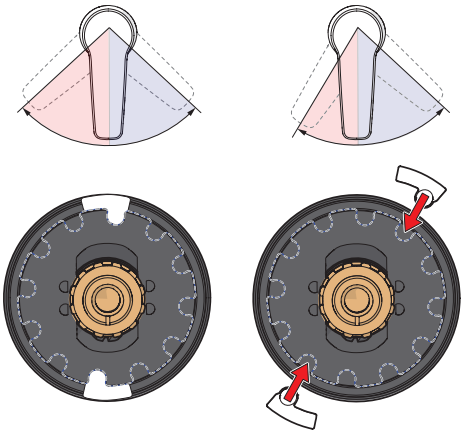

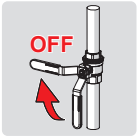

②

⑤

⑧

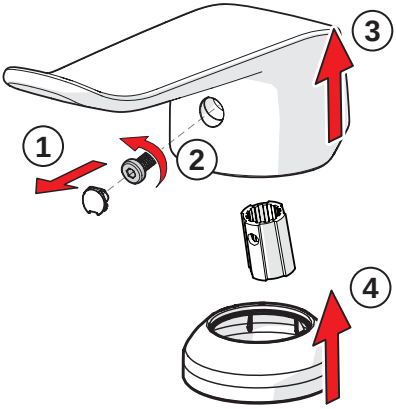

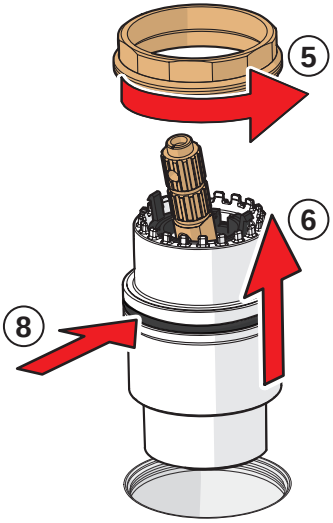

AA 1.5V

LINE

②③ ③

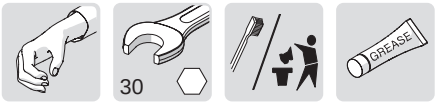
30
GREASE

①③ ② ③ ③

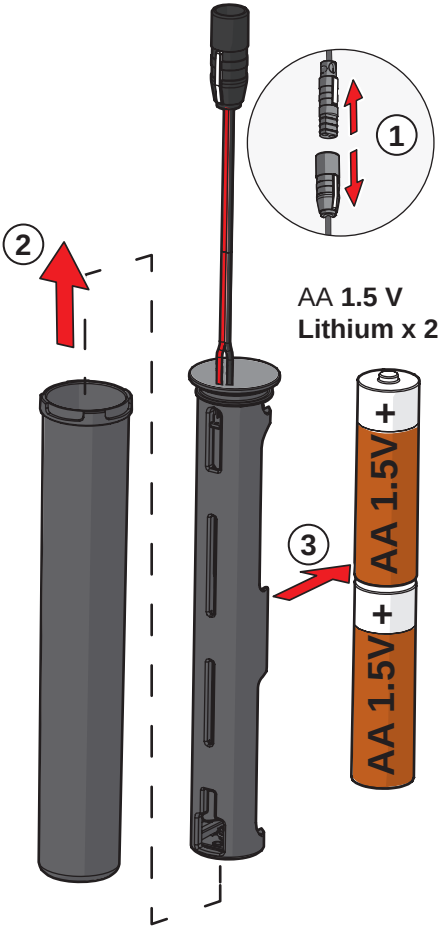
1
2
AA 1.5 V
Lithium x 2
3
AA 1.5V
AA 1.5V

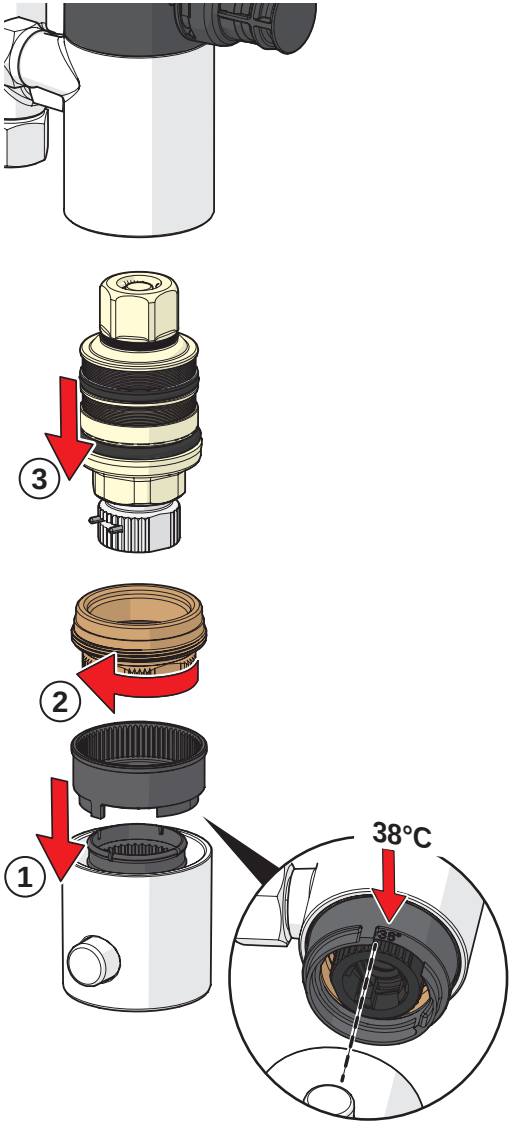
3
2
1
38°C

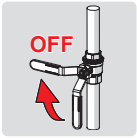

②

③

⑤

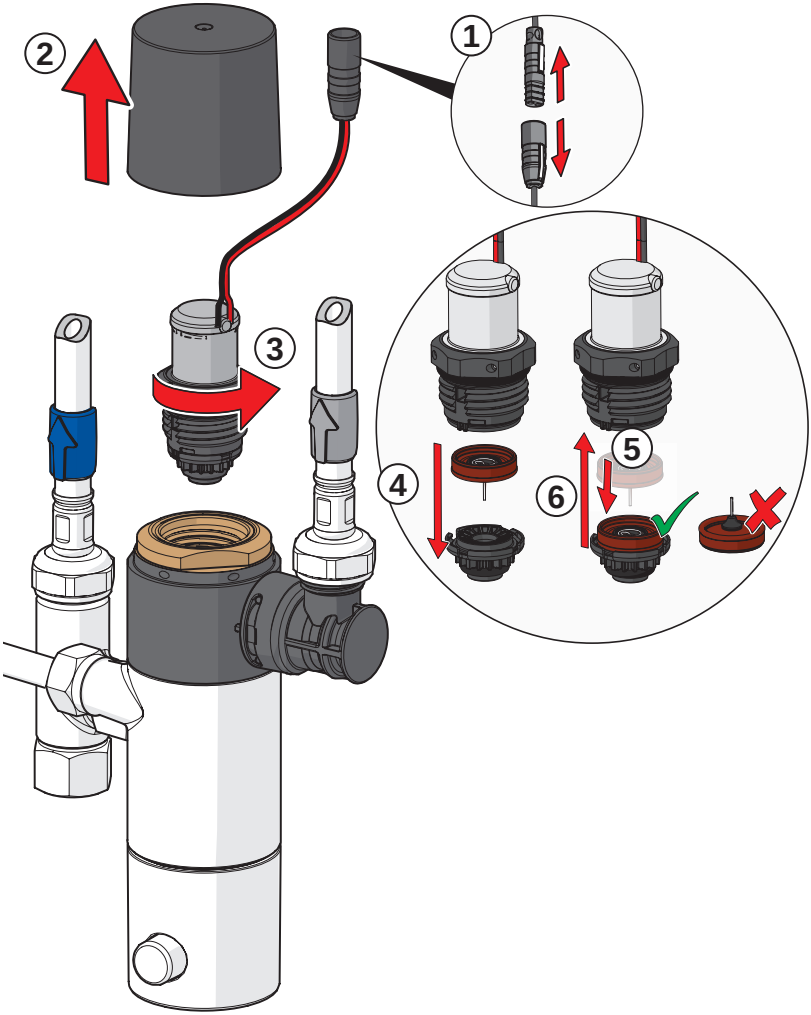

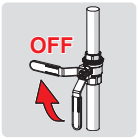

②

③

⑥

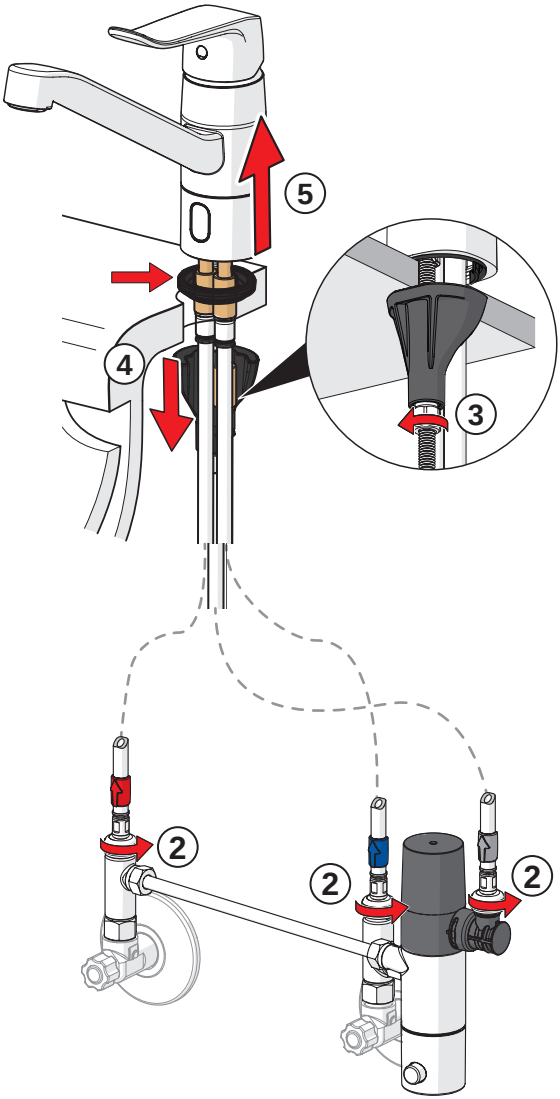

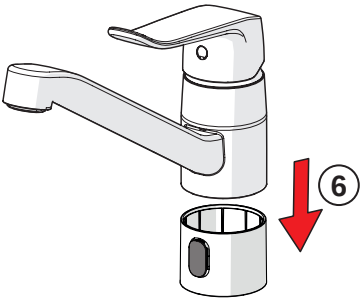

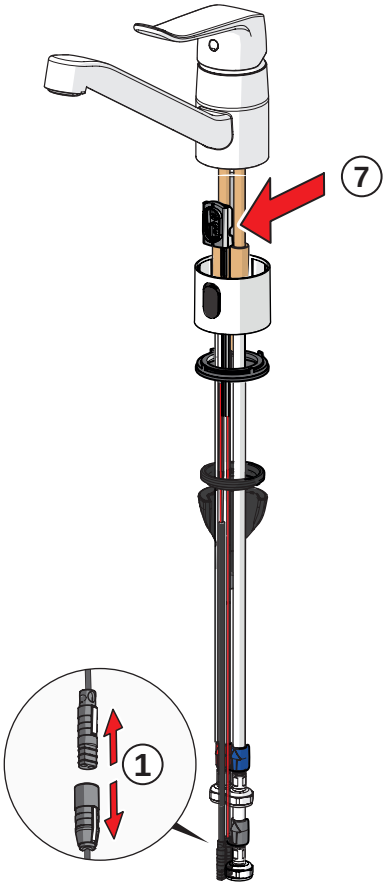

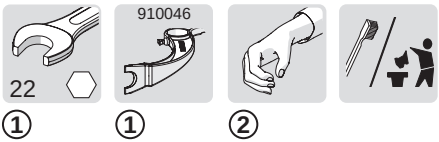

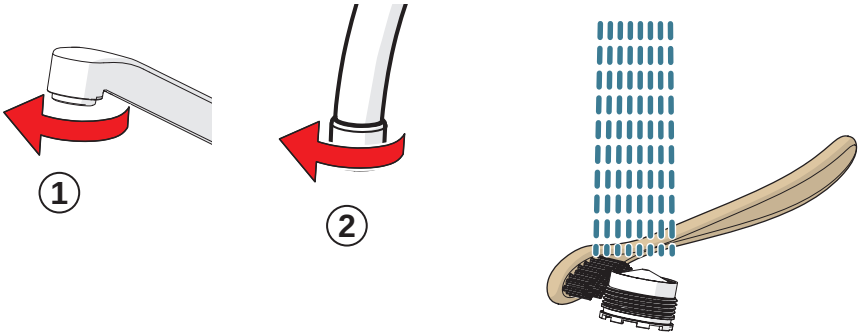

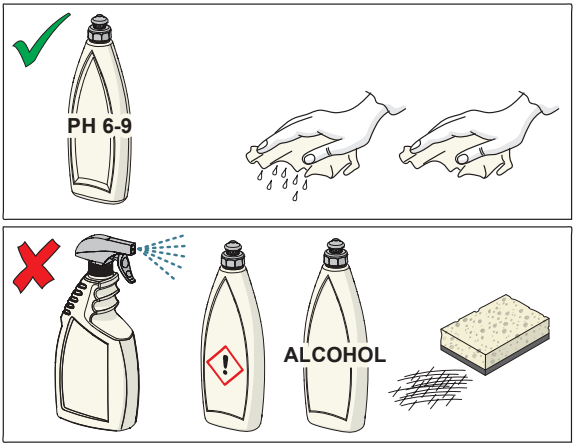

cleaning.oras.com

About Oras Group

Oras Group is a significant European provider of sanitary fittings: the market leader in the Nordics and a leading company in Continental Europe. The company's mission is to create the smartest water experiences for everyone and its vision is to become the Perfect Flow Company. The Group has two strong brands, Oras and Hansa. Oras Group is owned by Oras Invest, a family company, and an industrial owner.

The domicile of Oras Ltd, the parent company of the Group, is located in Rauma, Finland, and the Group has three manufacturing sites: Kralovice (Czech Republic), Olesno (Poland) and Rauma (Finland). The Group operates with its own staff in 17 markets. Oras Group's net sales were 233.5 million euros in 2021 and at the end of the period the company employed 1255 people.

943503-11-23

ORAS Ltd
Isometsäntie 2, P.O. Box 40
FI-26101 Rauma
Tel. +358 2 83 161
Fax +358 2 831 6300
info.finland@oras.com
www.oras.com