Oras

Installation and maintenance guide

BRANSCHREGLER SÄKER VATTENINSTALLATION

Accepterad
monteringsanvisning
2016:1

4-5

6-9

10

11

14

5510B

I (ISO 3822)
EN 817
50 - 1000 kPa
0.2 l/s (300 kPa)
80 kPa (0.1 l/s)
max. +80°C

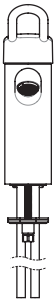

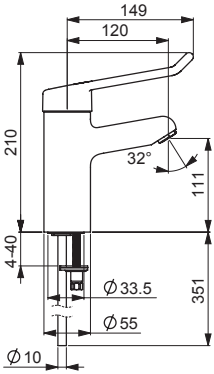

mpi.oras.com/5510B

5510A

I (ISO 3822)
EN 817
50 - 1000 kPa
0.2 l/s (300 kPa)
80 kPa (0.1 l/s)
max. +80°C

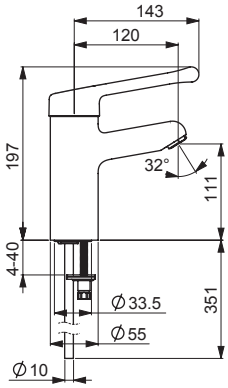

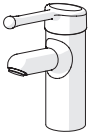

mpi.oras.com/5510A

5512BF

I (ISO 3822)
EN 817
50 - 1000 kPa
0.2 l/s (300 kPa)
80 kPa (0.1 l/s)
max. +80°C

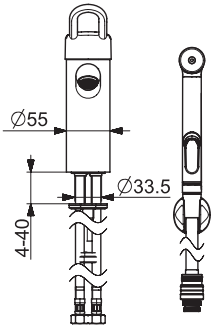

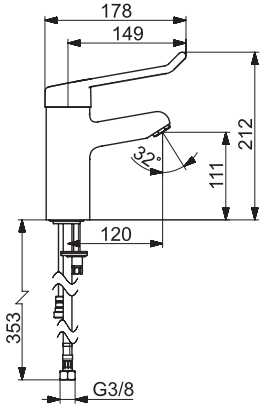

mpi.oras.com/5512BF

5512AF

I (ISO 3822)
EN 817, EN 1113
50 - 1000 kPa
0.11 / 0.13 l/s (300 kPa)
180 kPa (0.1 l/s)
max. +70°C

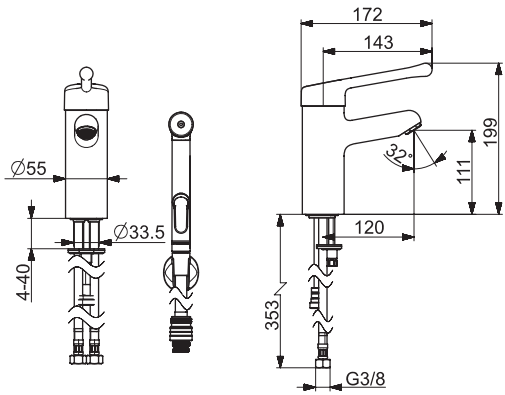

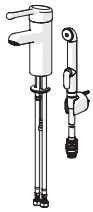

mpi.oras.com/5512AF

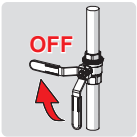

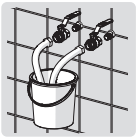

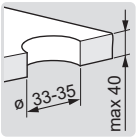

4

1

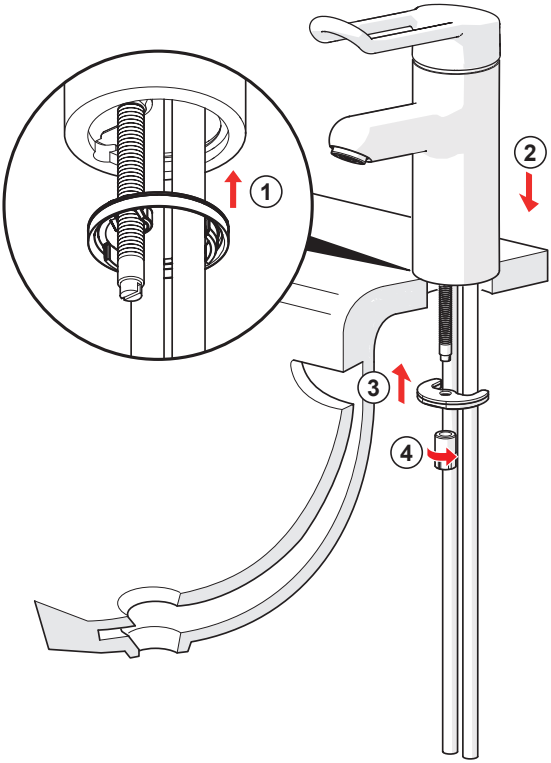

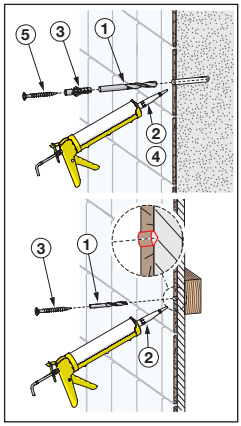

1 4

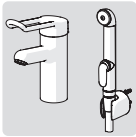

1

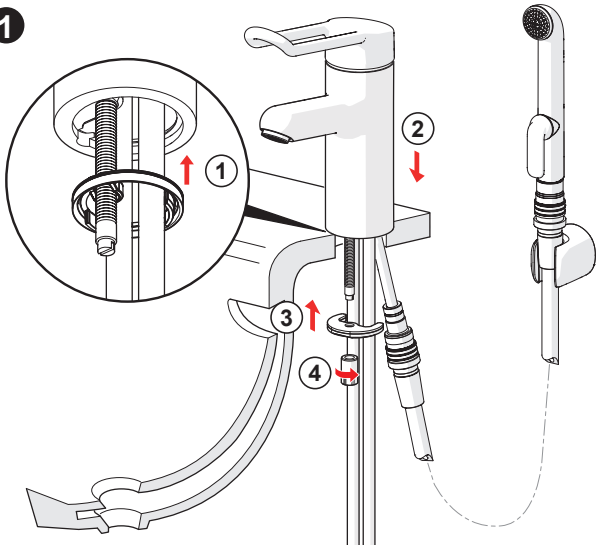

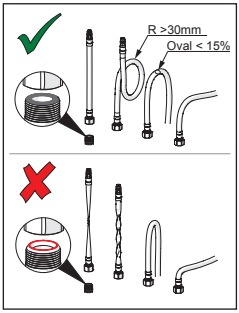

2

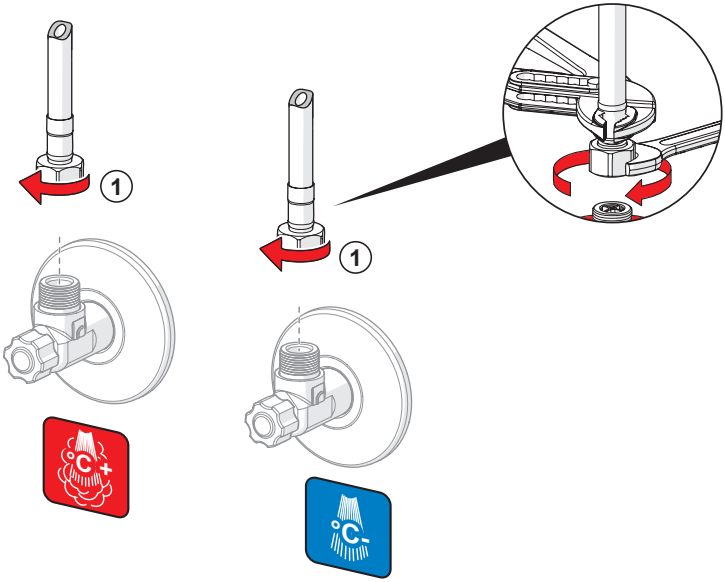

① ②

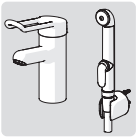

3

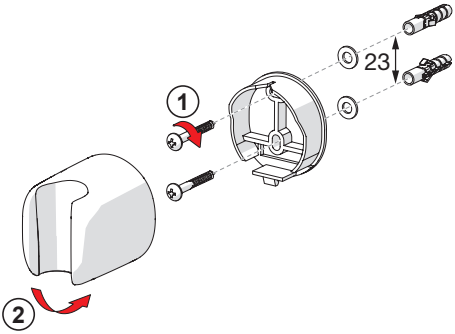

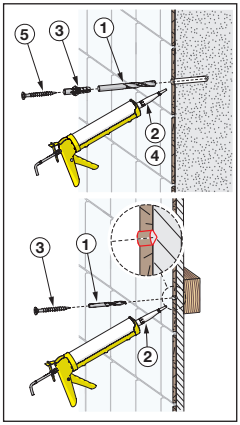

① ②

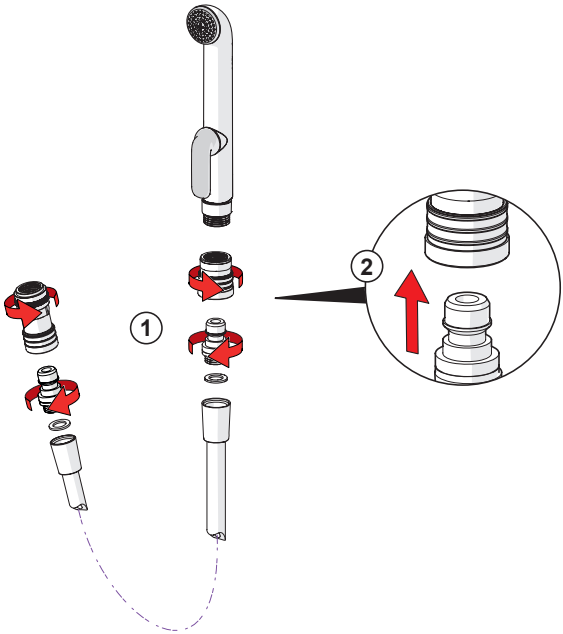

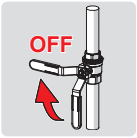

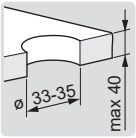

3

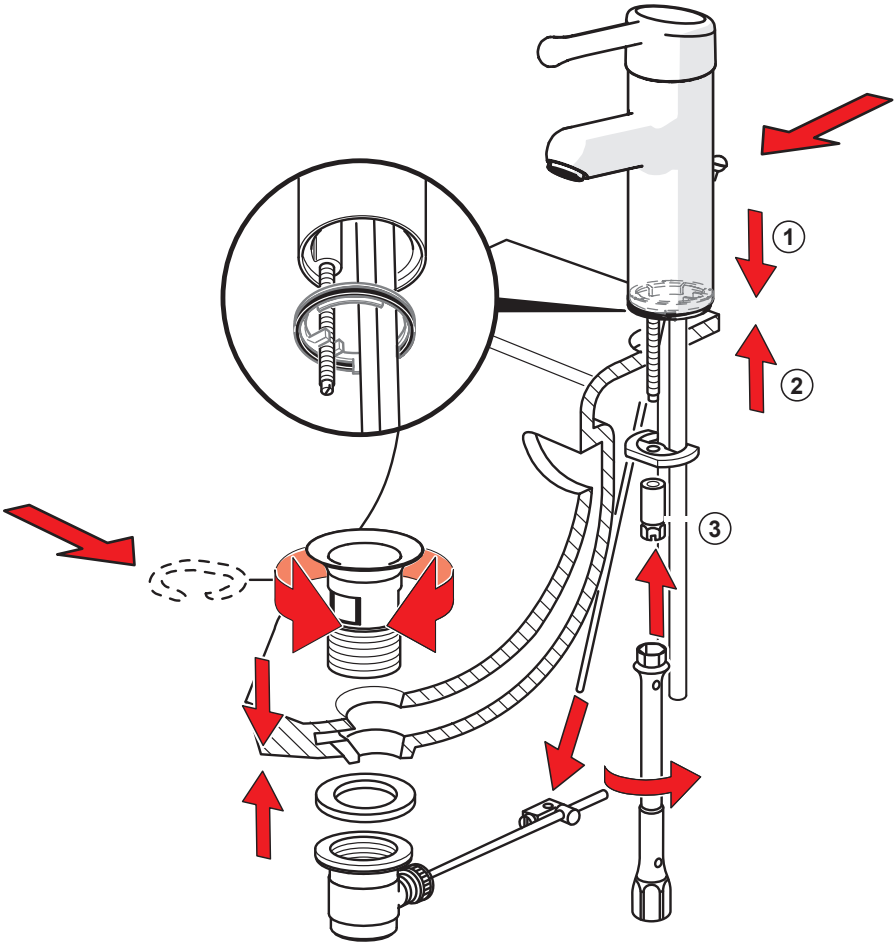

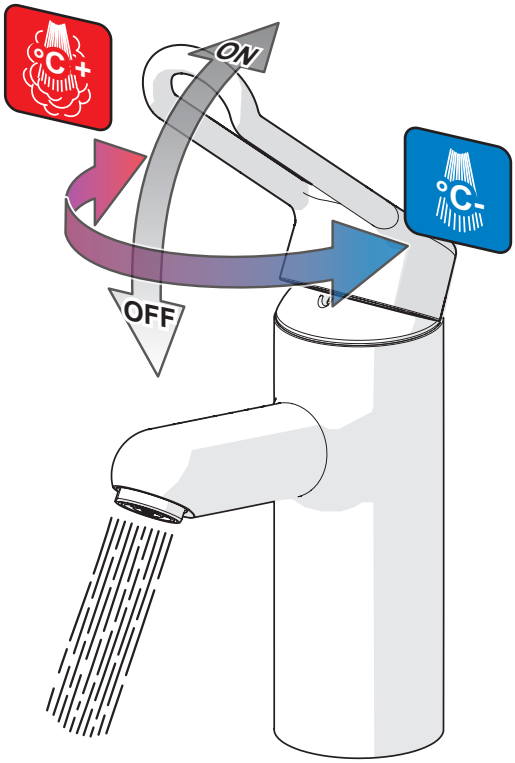
ON
OFF

①

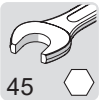

②

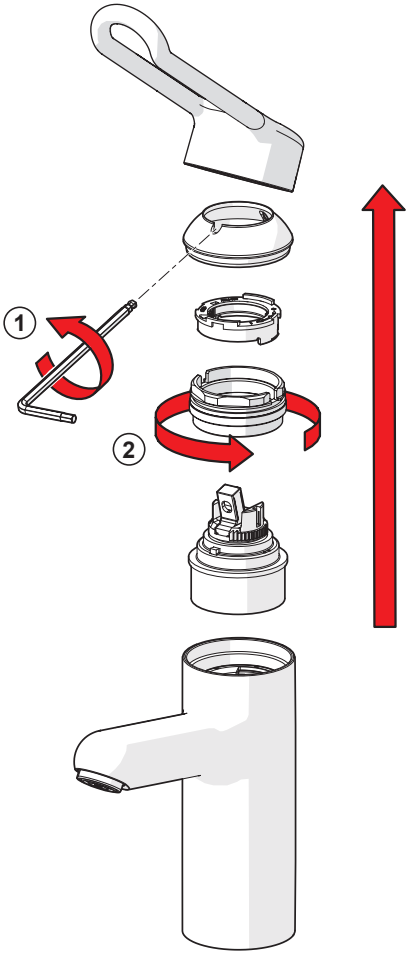

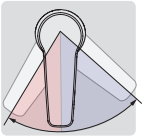

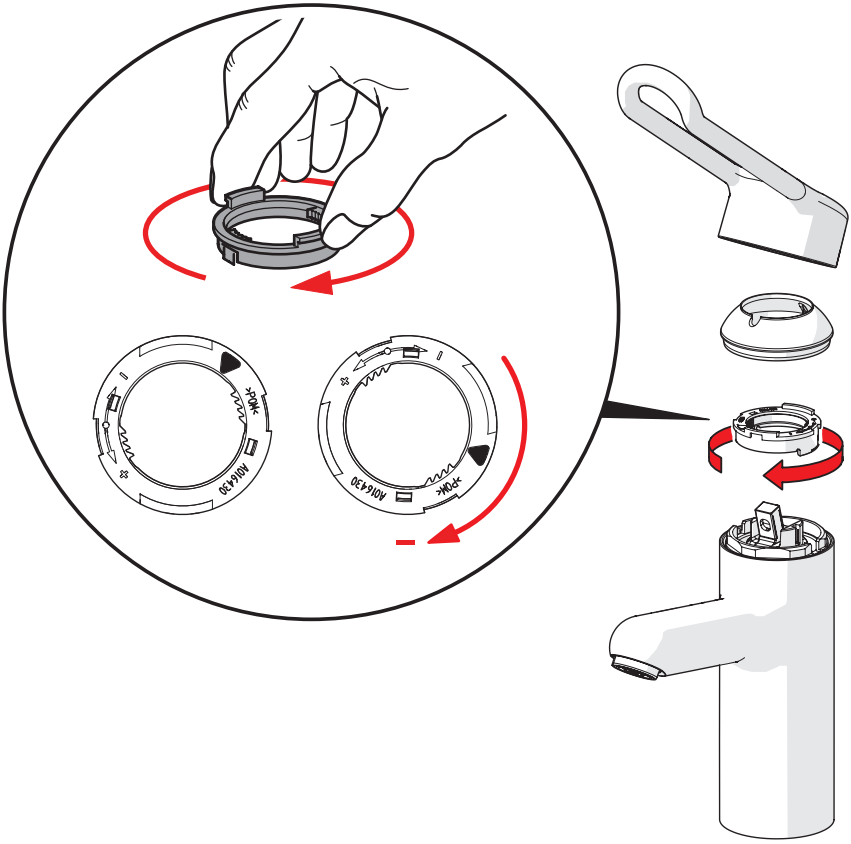
AD6430
AD6430

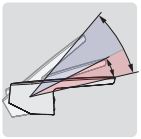

1

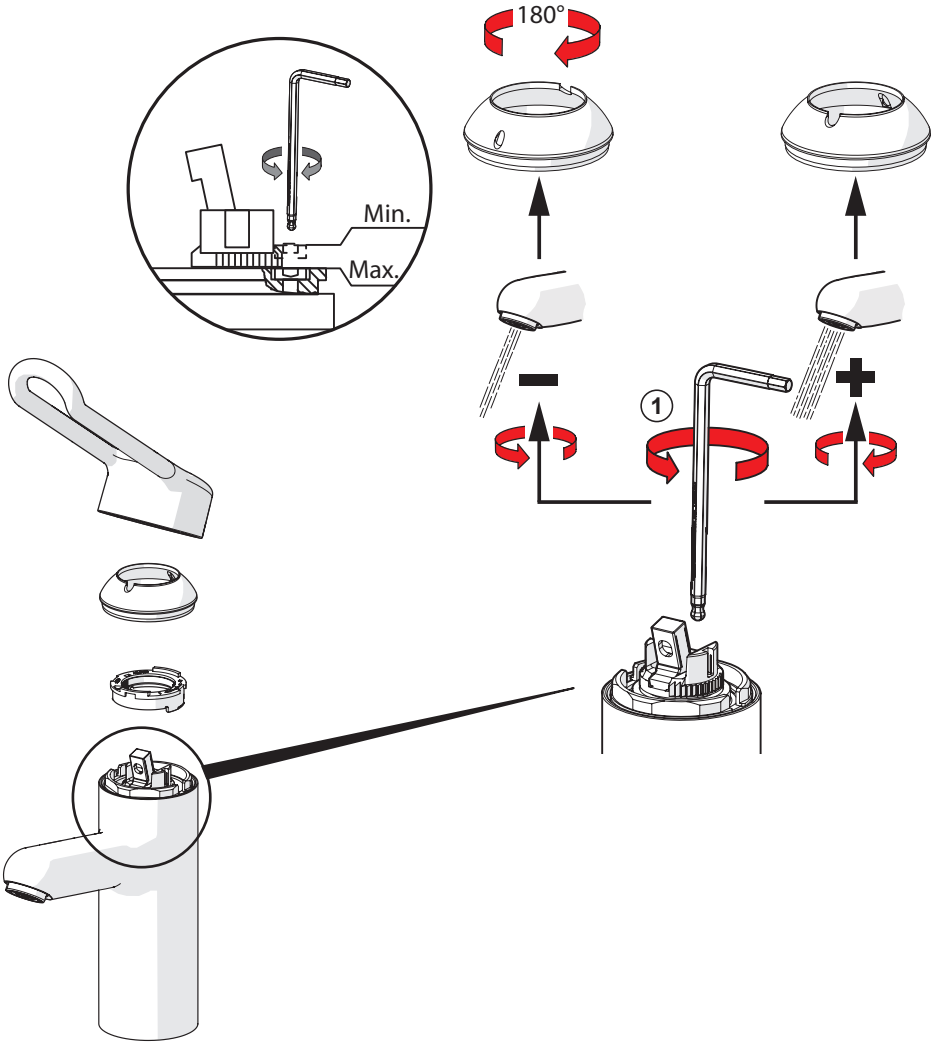

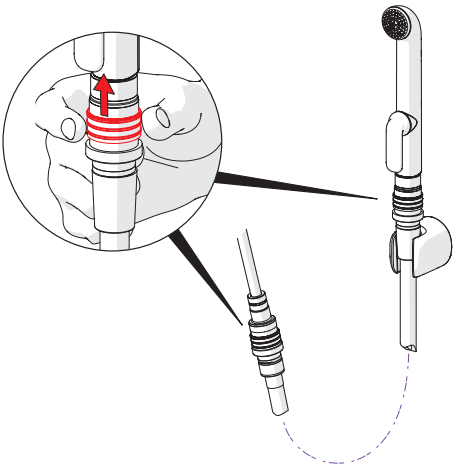

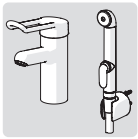

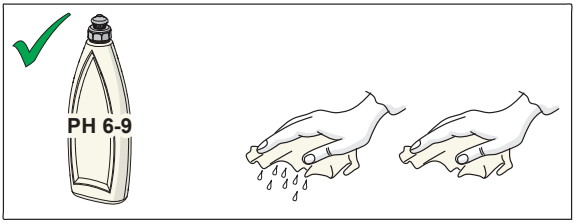

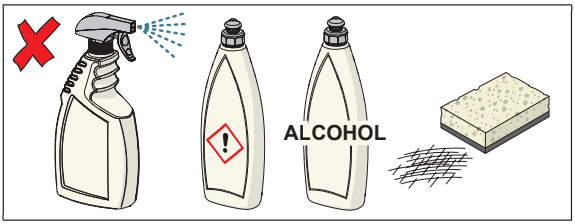

cleaning.oras.com

About Oras Group

Oras Group is a significant European provider of sanitary fittings: the market leader in the Nordics and a leading company in Continental Europe. The company's mission is to create the smartest water experiences for everyone and its vision is to become the Perfect Flow Company. The Group has two strong brands, Oras and Hansa. Oras Group is owned by Oras Invest, a family company, and an industrial owner.

The domicile of Oras Ltd, the parent company of the Group, is located in Rauma, Finland, and the Group has three manufacturing sites: Kralovice (Czech Republic), Olesno (Poland) and Rauma (Finland). The Group operates with its own staff in 17 markets. Oras Group's net sales were 233.5 million euros in 2021 and at the end of the period the company employed 1255 people.

943184-08-23

ORAS Ltd
Isometsäntie 2, P.O. Box 40
FI-26101 Rauma
Tel. +358 2 83 161
Fax +358 2 831 6300
info.finland@oras.com
www.oras.com