TJEP RC20A Rod Cutter

www.tjep.eu

KYOCERA

Technical specifications

Model	TJEP RC20A Rod Cutter
TJEP no.	102944
Size (L×W×H)	438×133×83 mm
Weight	3.5 kg
Minimum re-bar diameter	4 mm
Maximum re-bar diameter	20 mm
No-load blade speed	2,000 RPM
Max Blade Diameter	110 mm
Power Supply	24V Lithium-ion battery
Charging time	90 min
LPA,1s	88 dBA
LWA,1s	99 dBA
Vibration [m/s²]	Main handle: ah = 3,266 Auxiliary handle: ah = 2,3131 K = 1,5
Radiated emission [class]	Class II; IPX0

Declaration of conformity

We	Benner-Nawman Inc. 3450 Sabin Brown Rd. Wickenburg, AZ 85390, USA
As the manufacturer declare, under our sole responsibility, that the product	TJEP RC20A Rod Cutter
Conforms with following specifications:	**EMC:** EN 55014-2:2015, EN 55014-1:2017, EN 61000-3-2:2014, EN 61000-3-3:2013/A1:2019 **Low voltage directive:** EN 60335-1:2012+A11:2014+A13:2017, EN 60335-2-29:2004+A2:2010+A11:2018, EN 62233:2008 **Machine directive:** EN62841-1:2015, EN 62841-2-8:2016 **RoHS:** EN13428, EN13429, EN 13430, EN13431, EN13432
The product herewith complies with the requirements of the EU directives:	2014/30/EU relating to electromagnetic compatibility (EMC), 2006/42/EC relating to the Machinery Directive (MD) 2011/65/EU relating to the restrictions of hazardous substances (RoHS)
Serial number:	Signed: Date: February 05, 2020
Authorized contact in EU to compile the Technical File:	KYOCERA UNIMERCO Fastening A/S Drejervej 2, DK-7451 Sunds Tel: +45 97 14 14 40 Mr. Ebbe Hornstrup

TJEP RC20A Rod Cutter

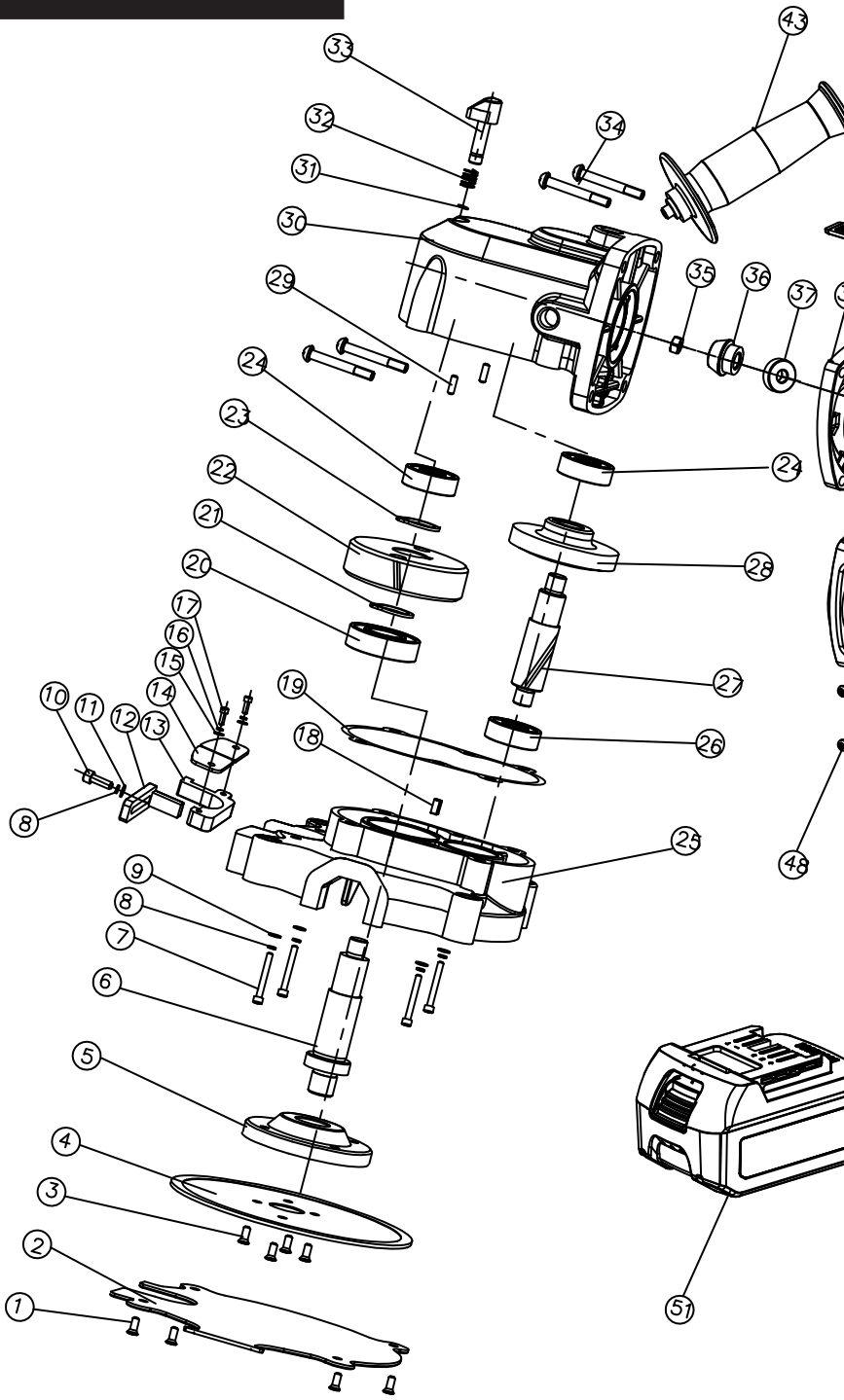

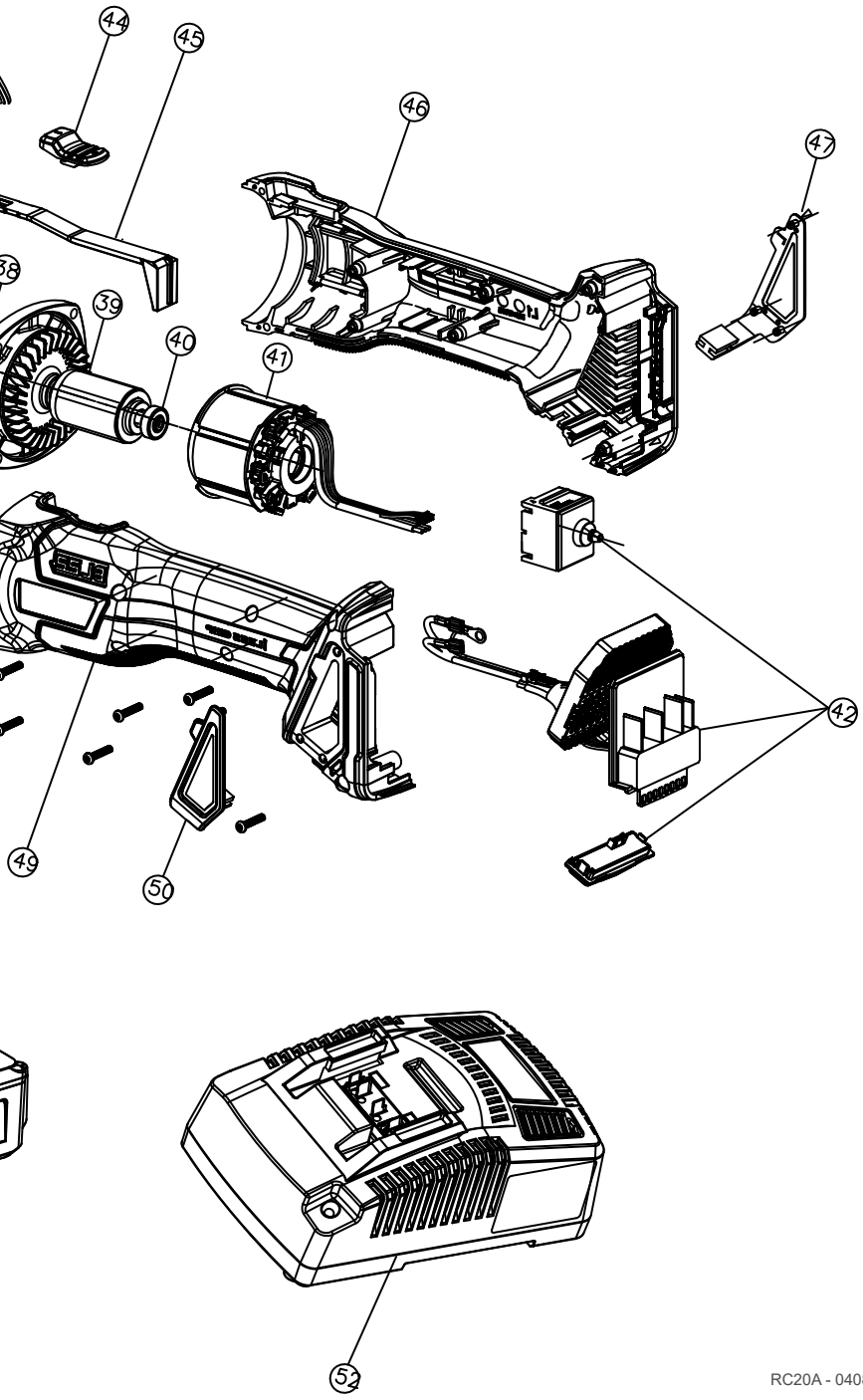
44
45
46
47
38
39
40
41
42
49
50
52

Spareparts

ITEM NO.	PART NO.	DESCRIPTION
1	BNCEP1-71	HEXAGON SOCKET SCREW (M5X14)
2	BNCEP1-72	BOTTOM PLATE GUARD (NEW)
3	BNCEP1-73	HEXAGON SOCKET SCREW (M5X8)
4	RB-RC20-NH	BLADE, REPLACEMENT TJEP RC20
6	BNCEP1-75	BLADE FLANGE AND SPINDLE
7	BNCEP-07	HEX BOLT (M5X30)
8	BNCEP-08	SPRING WASHER
9	BNCEP-09	PLAIN WASHER (5 mm)
10	BNCEP-20	HEX BOLT (M5X15)
11	BNCEP-66	PLATE WASHER (5mm)
12	BNCEP-18	MOVEABLE CUTTING GUIDE BLOCK
13	BNCEP-17	FIXED CUTTING GUIDE BLOCK
14	BNCEP-21	LEFT/ RIGHT RUBBER PLATE
15	BNCEP-22	PLAIN WASHER (4mm)
16	BNCEP-23	RETAINER WASHER (4mm)
17	BNCEP-24	CAP BOLT (M4X20)
18	BNCEP-78	FLAT KEY - 5X5X14
19	BNCEP-12	GASKET SEAL
20	BNCEP-25	BALL BEARING (6002-2RS)
21	BNCEP-26	SPACER
22	BNCEP-27	BIG GEAR
23	BNCEP-28	RETAINING RING
24	BNCEP24V-24	BALL BEARING (608-2Z)
25	BNCEP1-77	HOUSING, ALUM (NEW STYLE)
26	BNCEP24V-26	BALL BEARING (628-2Z)
27	BNCEP24V-27	GEAR SHAFT
28	BNCEP24V-28	BIG BEVEL GEAR
29	BNCEP-29	PIN (A5X16)
30	BNCEP24V-30	ALUMINUM GEAR BOX HOUSING
31	BNCEP-31	STEEL RING (6mm)
32	BNCEP-32	SPRING FOR LOCK BUTTON

ITEM NO.	PART NO.	DESCRIPTION
33	BNCEP-33	BLADE LOCKING BUTTONS
34	BNCEP24V-34	SIX FLOWER SHAPED PAN HEAD TAPPING SCREWST15
35	BNCEP24V-35	NUT
36	BNCEP24V-36	BEVEL PINION
37	BNCEP24V-37	BALL BEARING 608-2RS
38	BNCEP24V-38	DIAPHRAGM
39	BNCEP24V-39	ROTOR ASSY
40	BNCEP24V-40	BALL BEARING 696-2RS
41	BNCEP24V-41	STATOR
42	BNCEP24V-42	SWITCH ASSY
43	BNCEP-67	3 - POSITION SIDE HANDLE
44	BNCEP24V-44A	BUTTON ASSY
45	BNCEP24V-45	POLE SWITCH
46	BNCEP24V-46	RIGHT HOUSING
47	BNCEP24V-47	DUST PROTECTION-RIGHT
48	BNCEP24V-48	SCREW TAPPING PAN HEAD T10 TOR
49	BNCEP24V-49	LEFT HOUSING
50	BNCEP24V-50	DUST PROTECTION-LEFT
51	TJEP BNCE-24VLI 1039	BATTERY, 21.2V TJEP
52	BNCE-24VCHGR/ TJEP	CHARGER, TJEP CORDLESS 230V

KYOCERA UNIMERCO Fastening A/S
Drejervej 2
DK-7451 Sunds
Tlf. +45 97 14 14 40
Fax +45 97 14 14 86
tjep@kyocera-unimerco.com

© KYOCERA UNIMERCO 04.20

www.tjep.eu