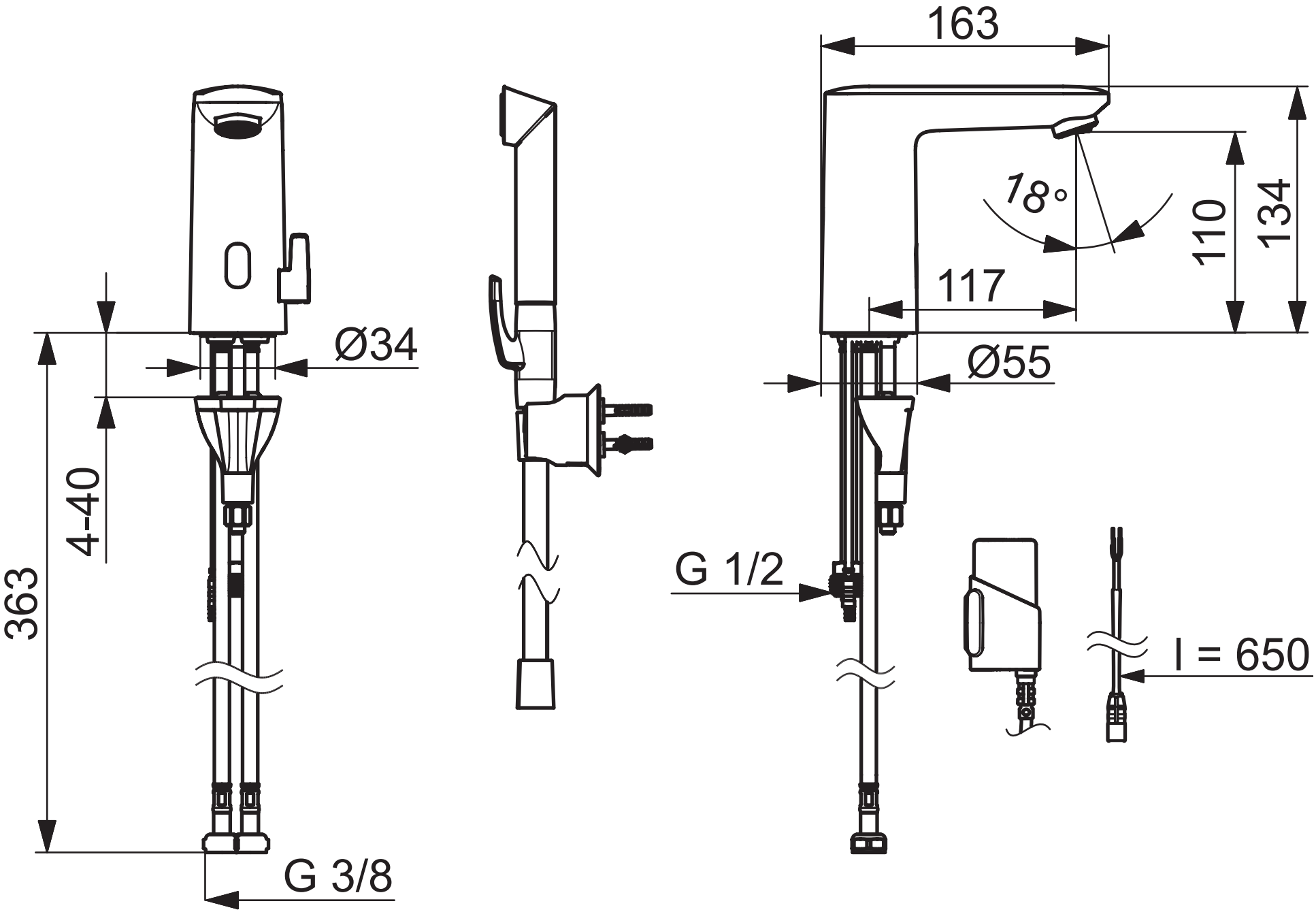
163
18°
110
134
117
Ø34
Ø55
4-40
363
G 1/2
l = 650
G 3/8