CONTURA
Shower

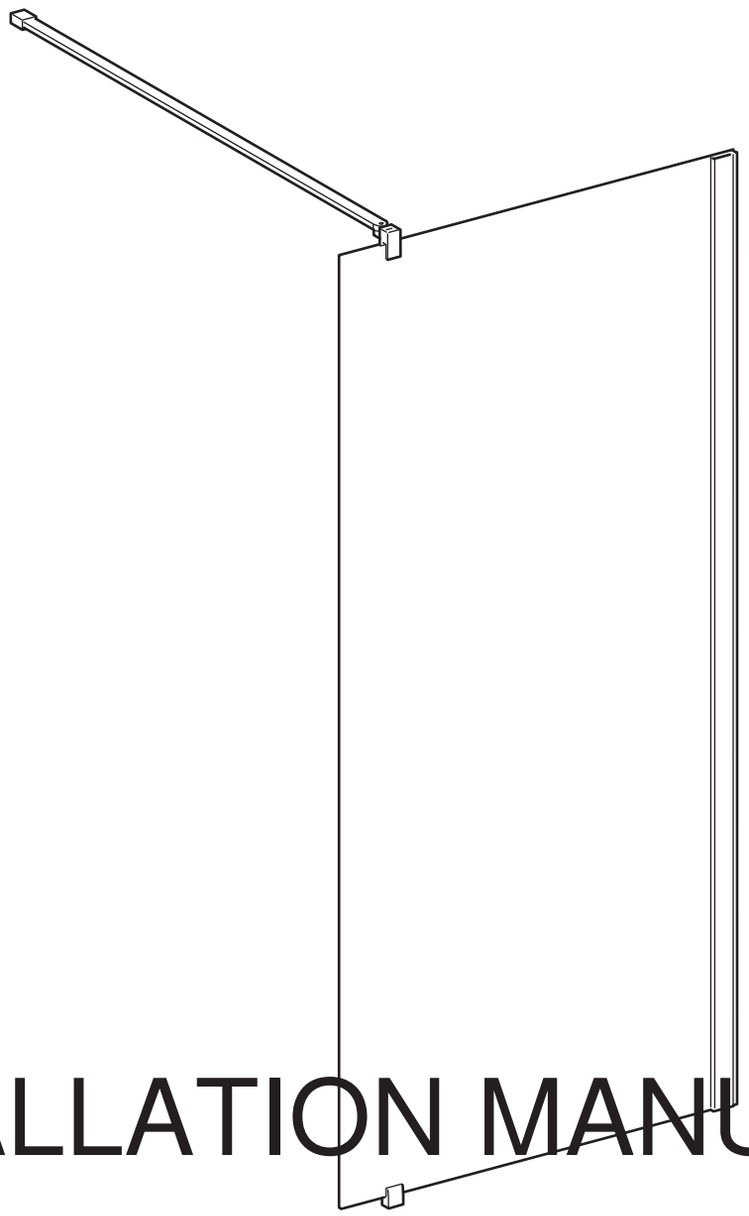

INSTALLATION MANUAL

MONTERINGSANVISNING
MONTERINGSANVISNING
MONTERINGSVEJLEDNING
ASENNUSOHJE

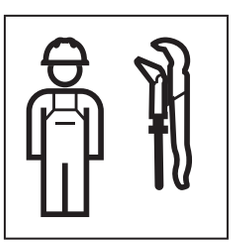

970.721.00.0(00)

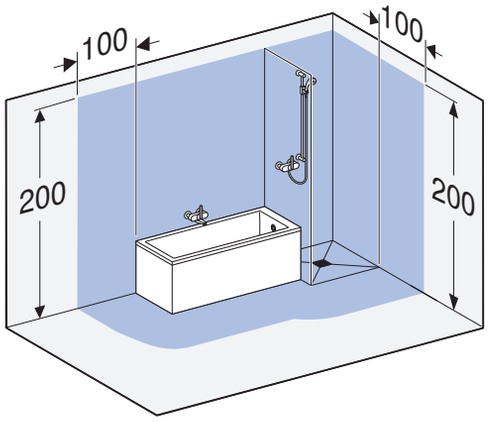

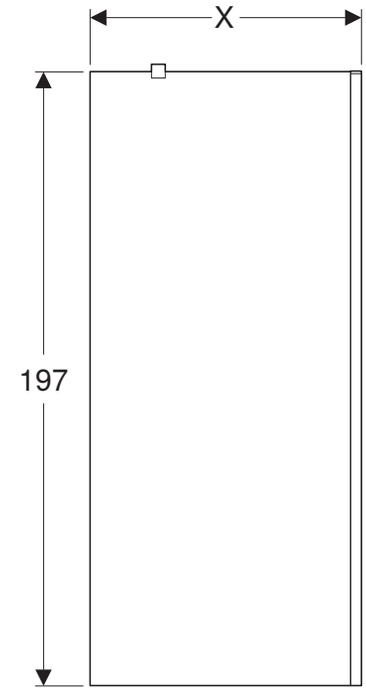

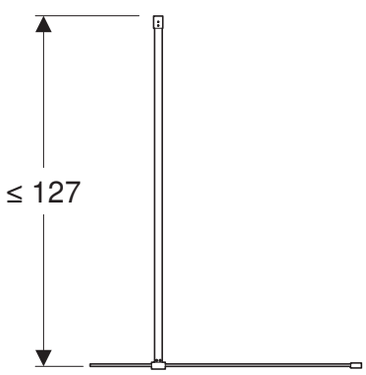

X
60
70
80
90
100

18014406473578507 © 08-2021
970.721.00.0(00)

1

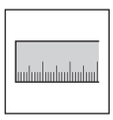

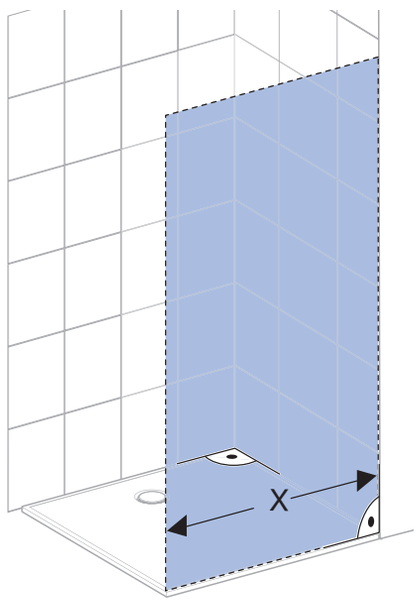

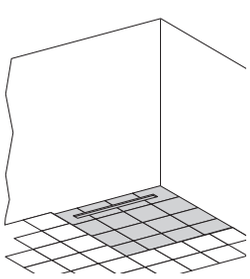



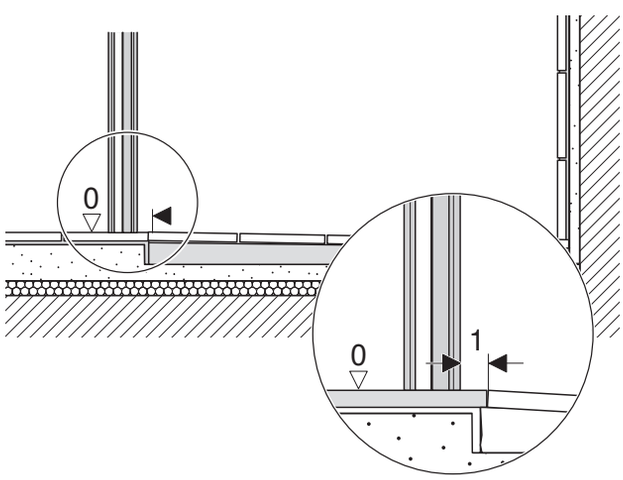

✓



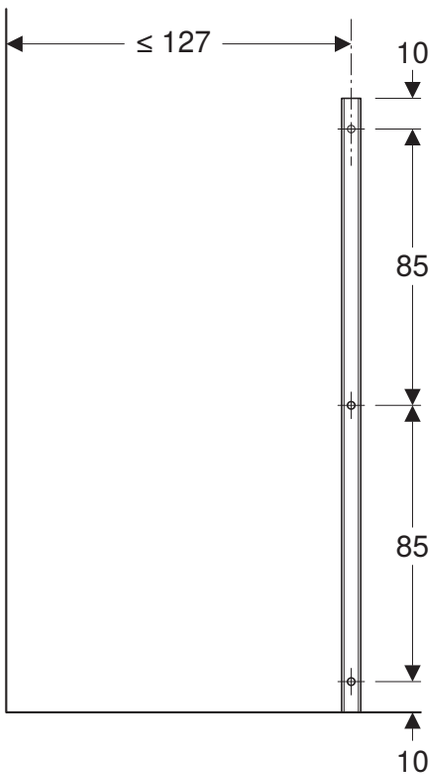

1

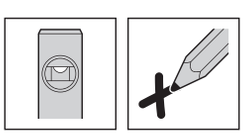

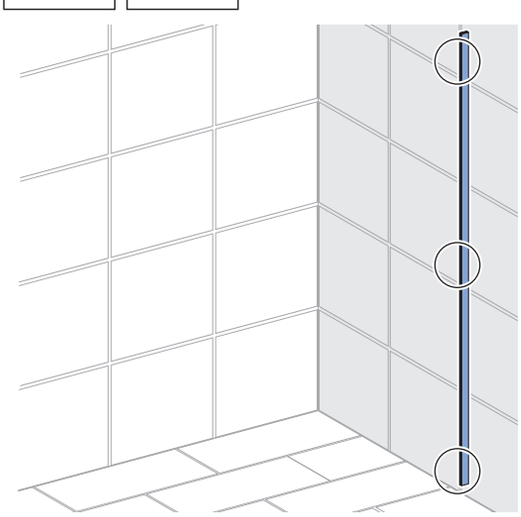

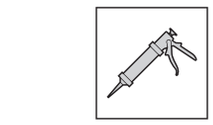

EN 15651-3: Class XS1

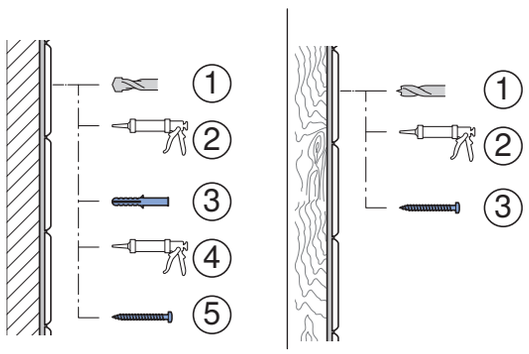

2

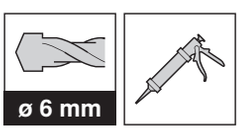

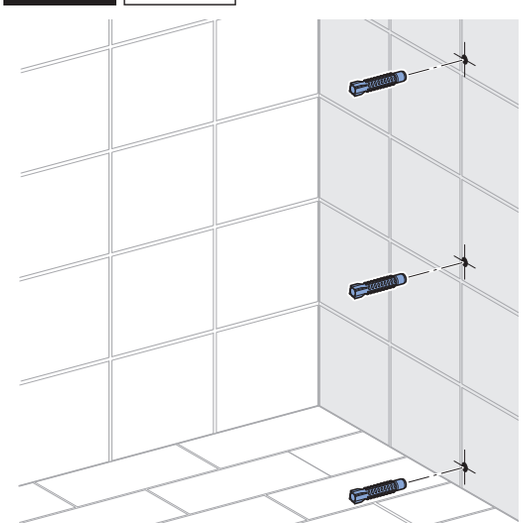

18014406473578507 © 08-2021
970.721.00.0(00)

3



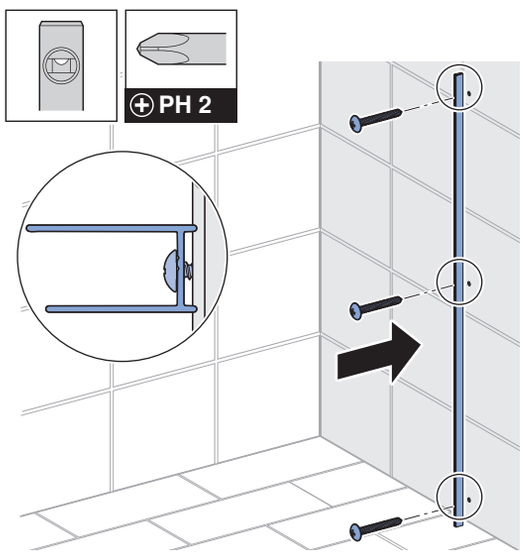

4

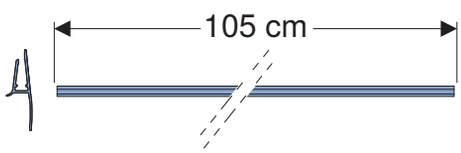

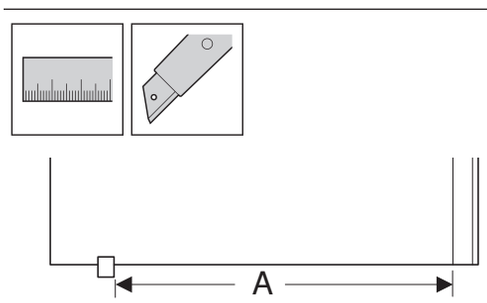

5

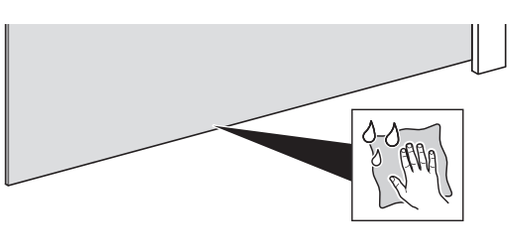

6

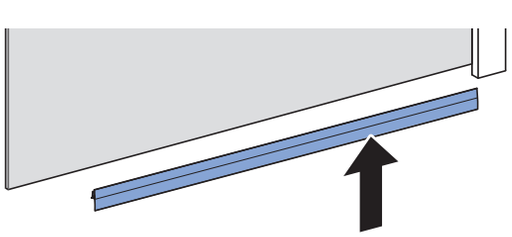

7

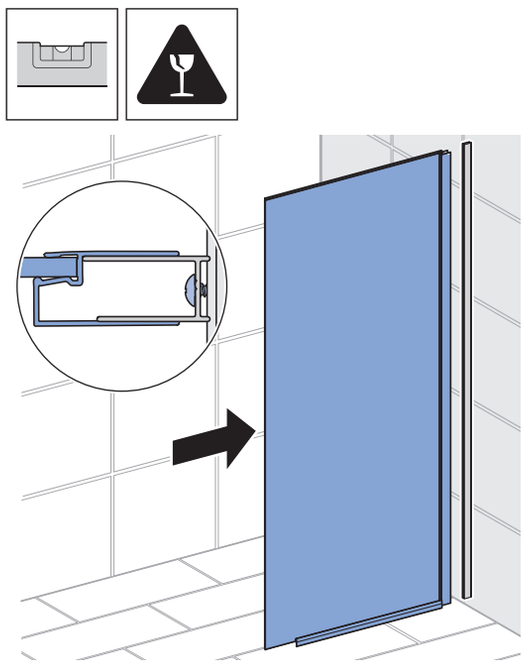

8

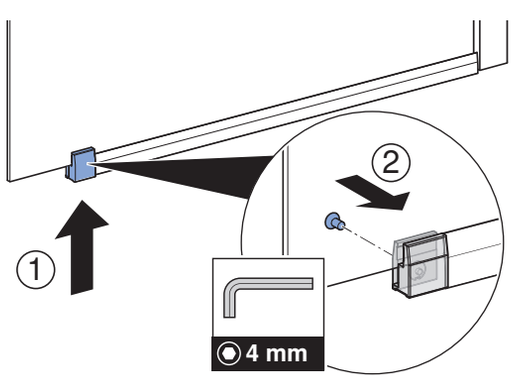

9

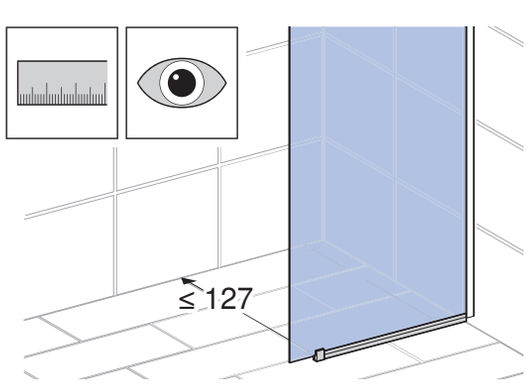

10

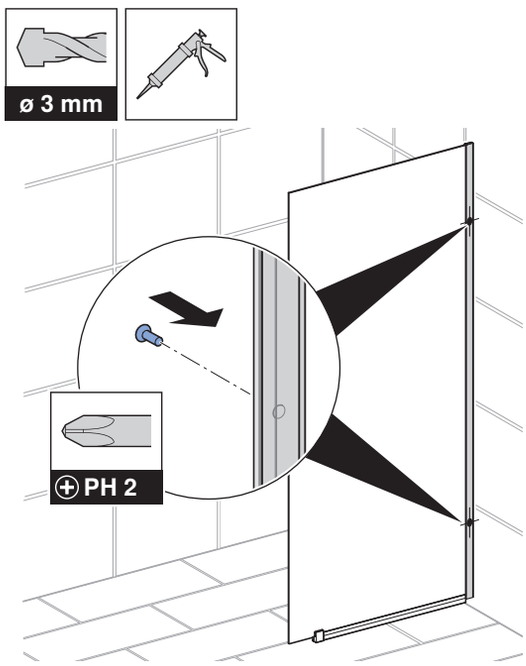

2

1

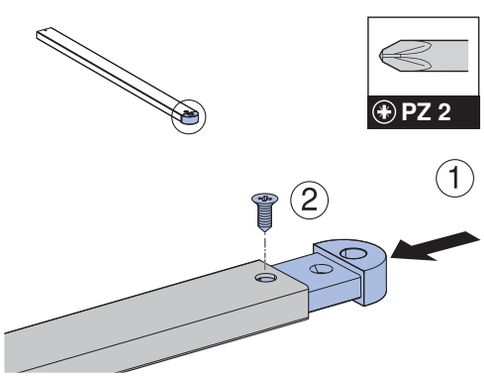

2

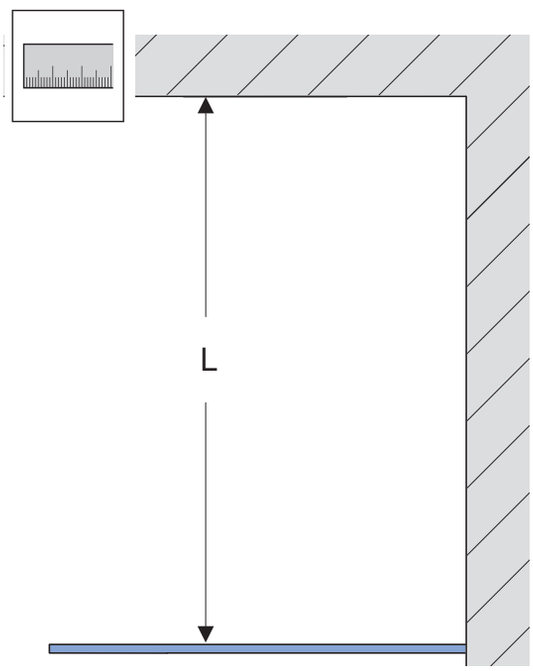

3

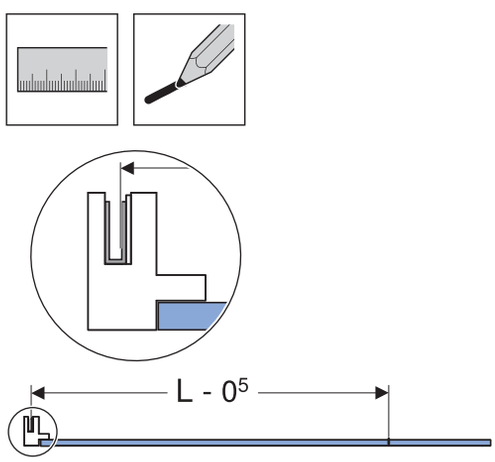

4

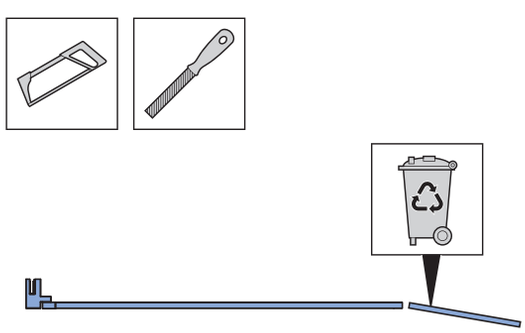

18014406473578507 © 08-2021
970.721.00.0(00)

5

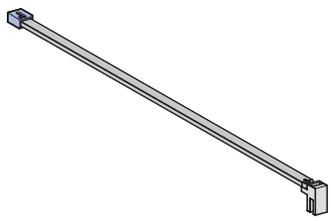

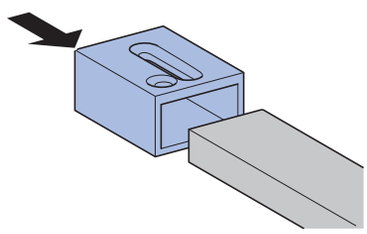

6

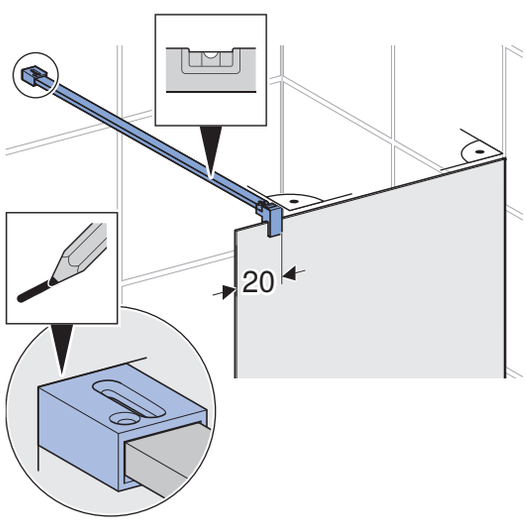

7

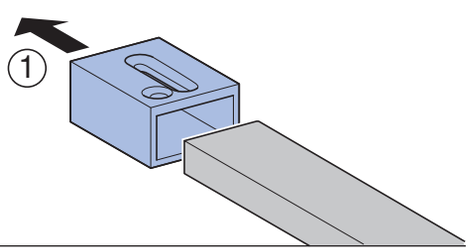

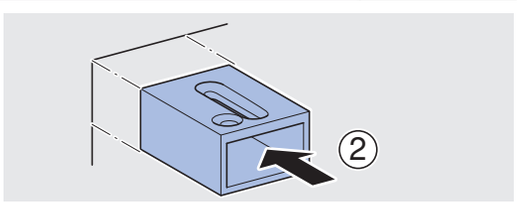

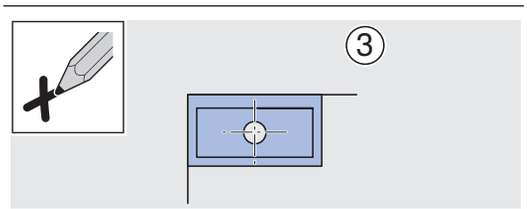

8

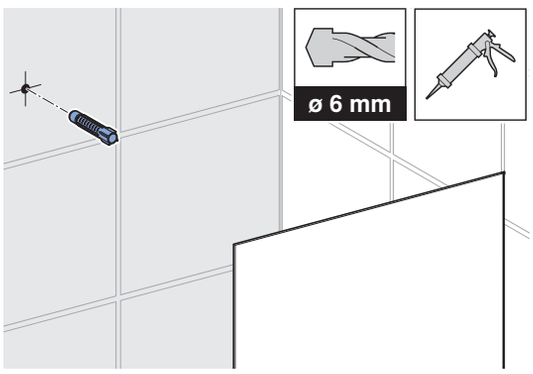

9

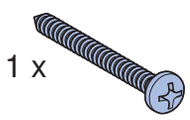

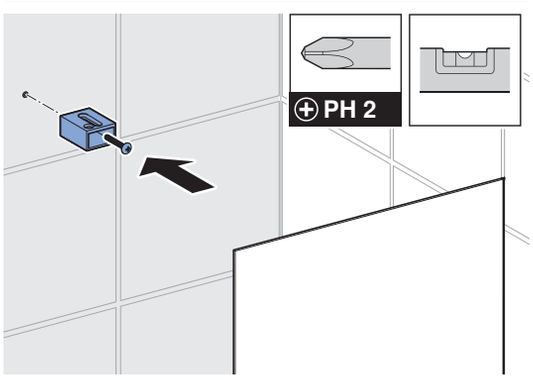

10

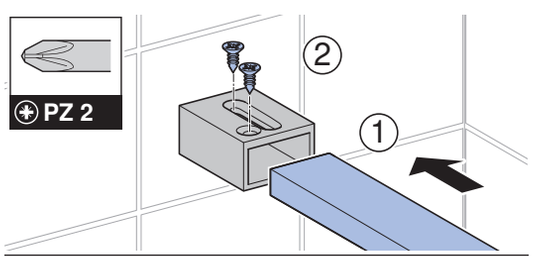

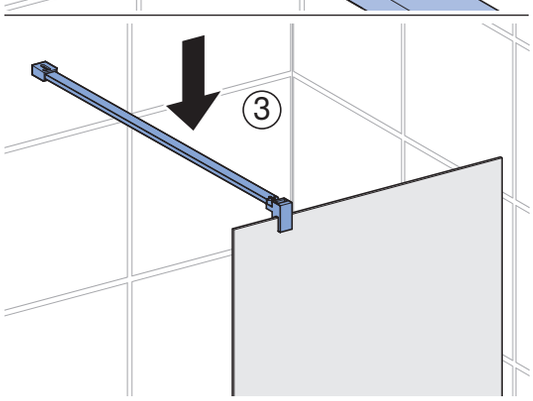

11

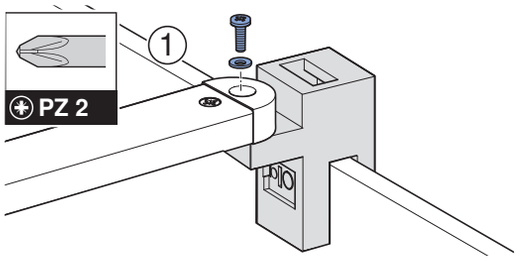

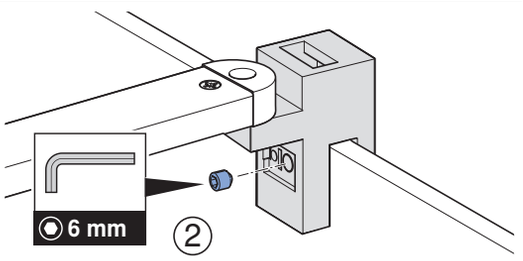

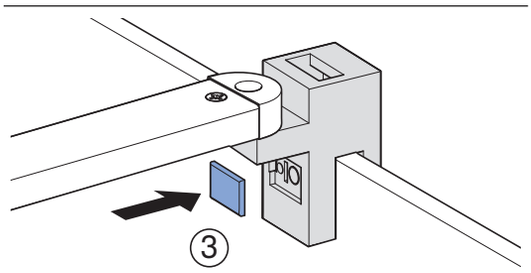

3

1

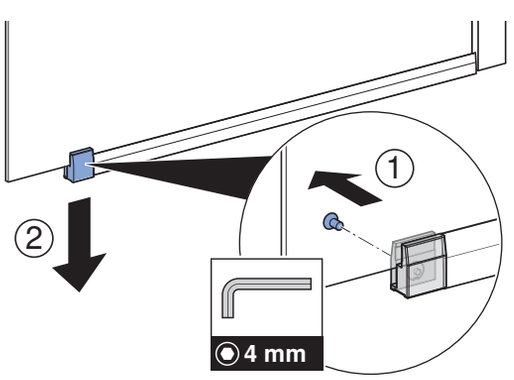

2

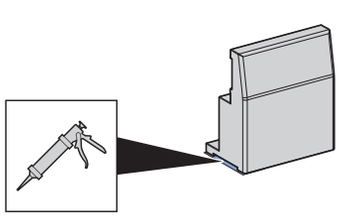

3

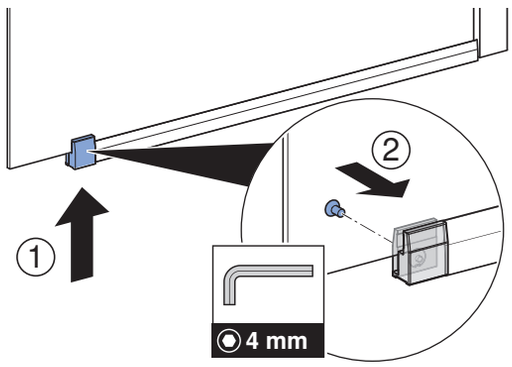

4

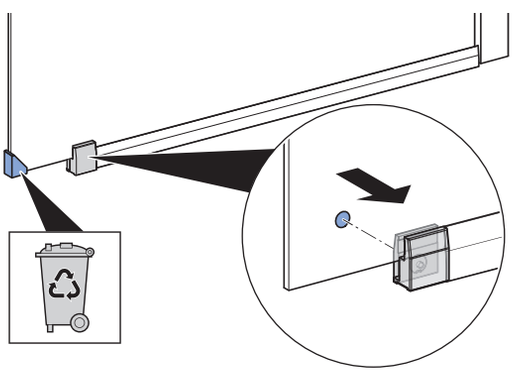

5

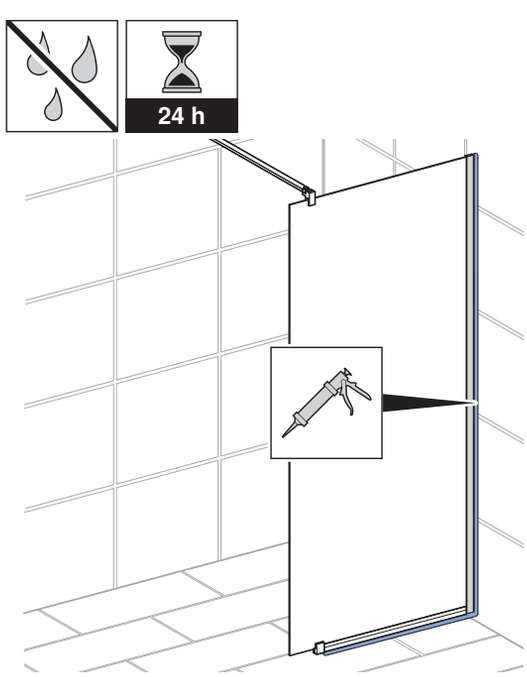

18014406473578507 © 08-2021
970.721.00.0(00)