Oras

Installation and maintenance guide

4-7

8-10

11

12-15

16

I (ISO 3822)
100 - 1000 kPa
max. +70°C

Frequency: 2,4 GHz
Max power: 10 mW
Radio range: 25 m

We declare that the Electra line conforms to the Radio Equipment Directive 2014/53/EU, the Low Voltage Directive 2014/35/EU, the EMC Directive 2014/30/EU and the RoHS Directive 2011/65/EU.
For more information:
https://static.oras.com

Oras App

Download on the App Store

GET IT ON Google Play

apps.oras.com

Apple and the Apple logo are trademarks of Apple Inc., registered in the U.S. and other countries. App Store is a service mark of Apple Inc., registered in the U.S. and other countries.

Google Play and the Google Play logo are trademarks of Google Inc.

The Bluetooth® word mark and logos are registered trademarks owned by the Bluetooth SIG, Inc. and any use of such marks by Oras Group is under license. Other trademarks and trade names are those of their respective owners.

IP 55
9 / 12 V

5520F

I (ISO 3822) Oras lab.
0.1 l/s (300 kPa w/Controller)
200 kPa (0.1 l/s)

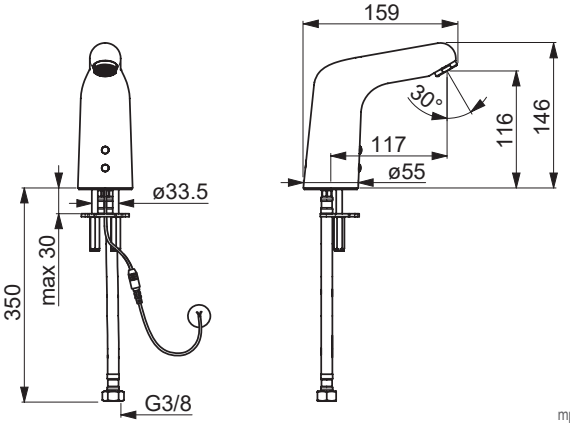

mpi.oras.com/5520F

5521F

I (ISO 3822) Oras lab.
0.1 l/s (300 kPa w/Controller)
200 kPa (0.1 l/s)

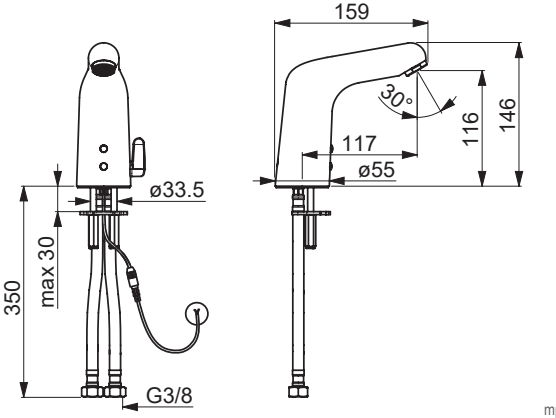

mpi.oras.com/5521F

5522F

I (ISO 3822) Oras lab.
0.1 l/s (300 kPa w/Controller)
200 kPa (0.1 l/s)

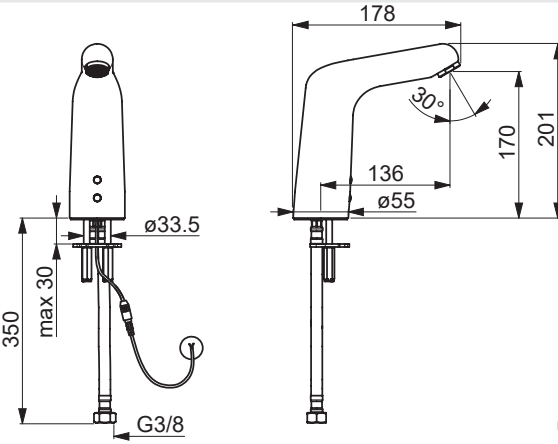

mpi.oras.com/5522F

5552F

I (ISO 3822) Oras lab.
0.1 l/s (300 kPa w/Controller)
200 kPa (0.1 l/s)

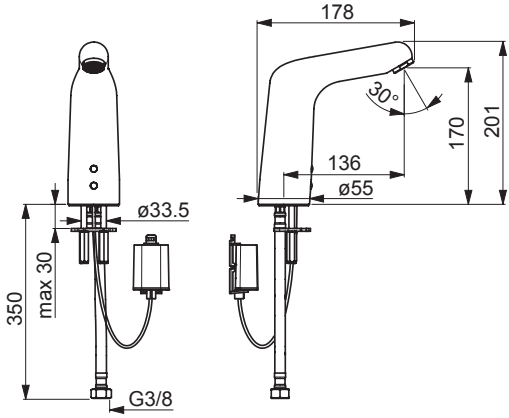

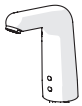

mpi.oras.com/5552F

5550F

I (ISO 3822) Oras lab.
0.1 l/s (300 kPa w/Controller)
200 kPa (0.1 l/s)

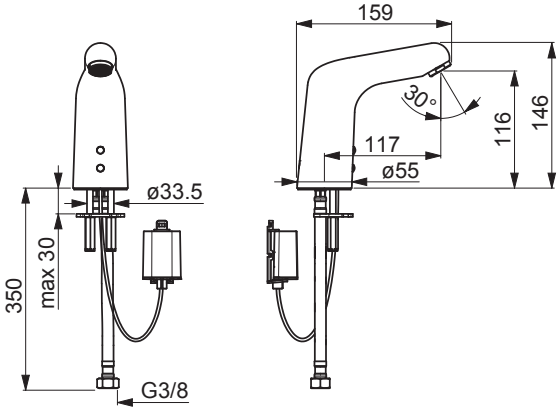

mpi.oras.com/5550F

5551F

I (ISO 3822) Oras lab.
0.1 l/s (300 kPa w/Controller)
200 kPa (0.1 l/s)

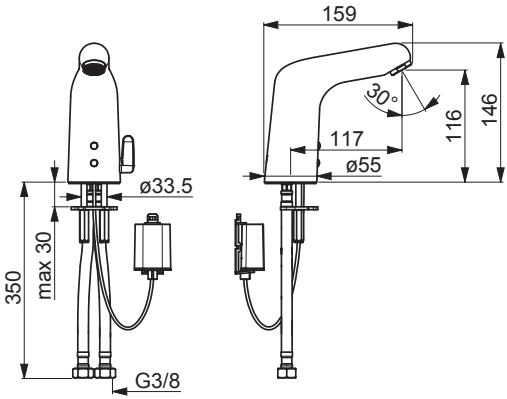

mpi.oras.com/5551F

IP 55
9 / 12 V (5523F)
Lithium 2CR5 6 V (5553F)

5523F

I (ISO 3822) Oras lab.
0.1 l/s (300 kPa w/Controller)
200 kPa (0.1 l/s)

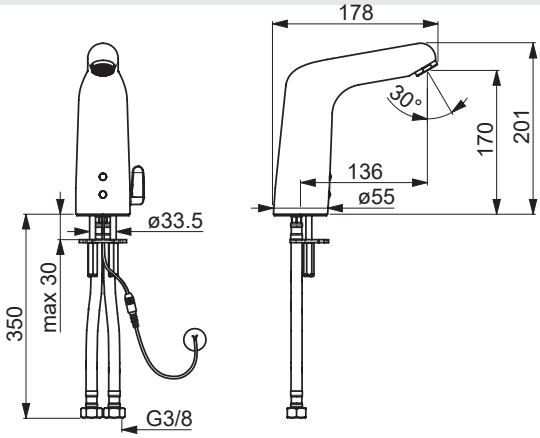

mpi.oras.com/5523F

5553F

I (ISO 3822) Oras lab.
0.1 l/s (300 kPa w/Controller)
200 kPa (0.1 l/s)

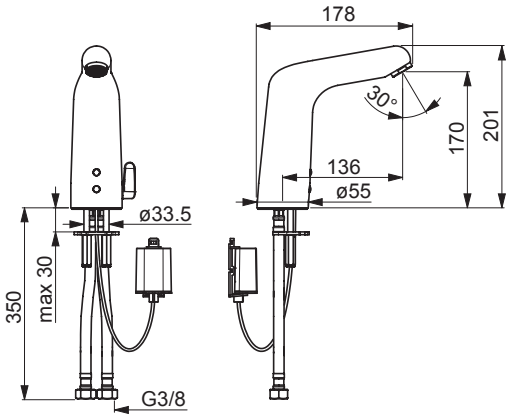

mpi.oras.com/5553F

GB Power supply requirement: Power supply output must be short circuit protected.
CZ Požadavky týkající se napájecího zdroje: Výstup napájecího zdroje musí být chráněn proti zkratu.
DE Stromversorgungsvoraussetzungen: Stromversorgungsspannung muss kurzschlussgeschützt sein.
DK Krav til strømforsyning: Strømforsyningsudgang skal være kortslutningsbeskyttet.
EE Nõuded vooluallikale: Vooluallika väljund peab olema kaitstud lühise eest.
ES Requisitos del suministro eléctrico: el suministro eléctrico debe estar protegido contra cortocircuitos.
FI Vaatimukset virtalähteelle: Virtalähteen ulostulon tulee olla oikosulkusuojattu.
FR Unité d'alimentation électrique: La sortie de l'unité d'alimentation oit être protégée contre le court-circuit.
IT Requisiti dell'alimentazione: L'uscita deve essere protetta da cortocircuiti.
LT Reikalavimai maitinimo šaltiniui: turi būti apsauga nuo trumpo jungimo.
LV Prasības attiecībā uz barošanas ierīci: ierīces izvadam jābūt aizsargātam pret īsslēgumiem.
NL Vereisten voor de voeding: De uitgang van de voeding moet beschermd zijn tegen kortsluitingen.
NO Krav til strømforsyning: Strømforsyningsspenning må være kortslutningssikret.
PL Wymagania w stosunku do zasilacza: Zasilacz musi być wyposażony w zabezpieczenie przeciwzwarciowe.
RO Pentru alimentarea cu putere: borna de putere trebuie să fie protejată la scurtcircuit.
RU Требования к источнику тока: Выход источника тока защищен от короткого замыкания.
SE Krav på matningsdon: Utspänningen skall vara kortslutningssäker.
SK Požiadavka na napájanie: Výstup napájania musí byť chránený voči skratu.
UA Вимоги до джерела струму: Вихід джерела струму захищений від короткого замикання.

199275

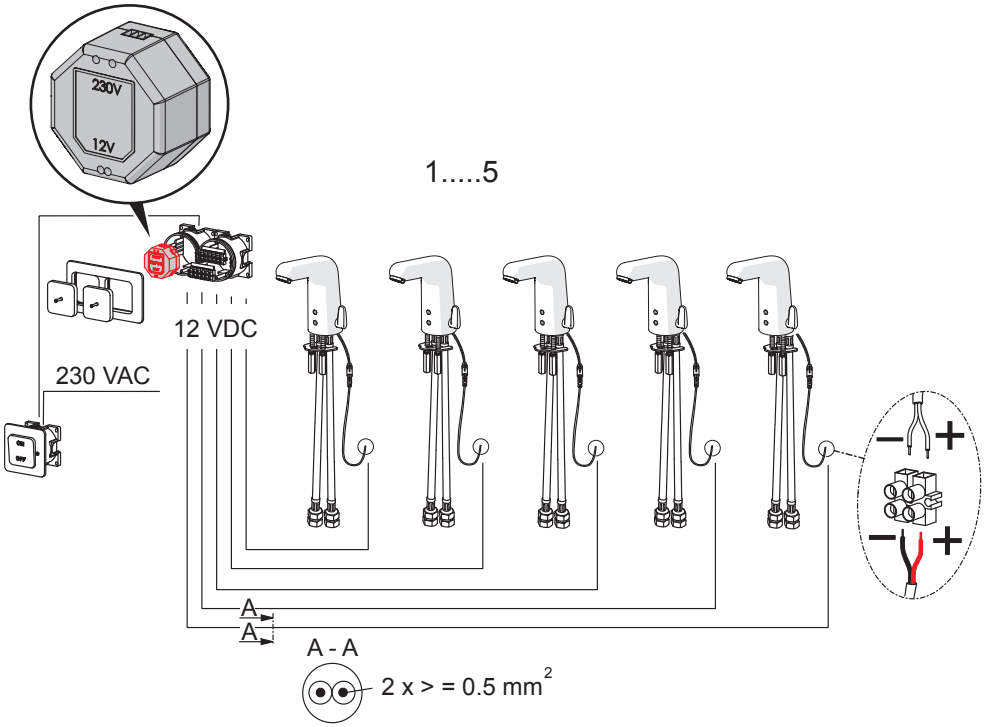

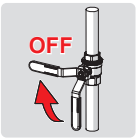

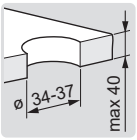

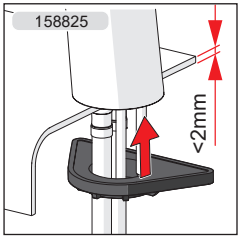

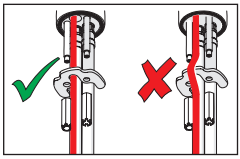

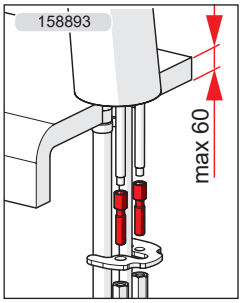

1

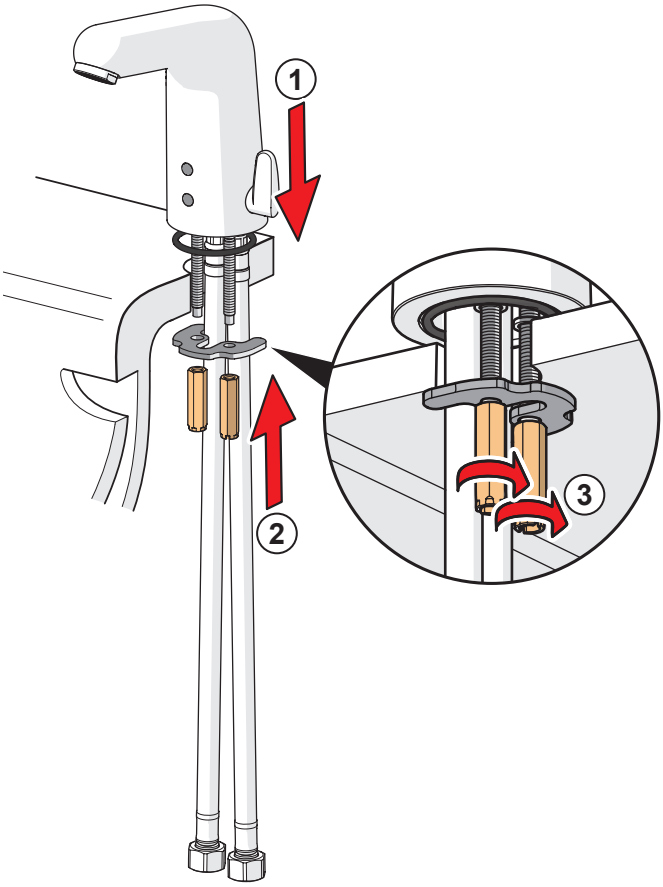

①②

max.
1600 kPa

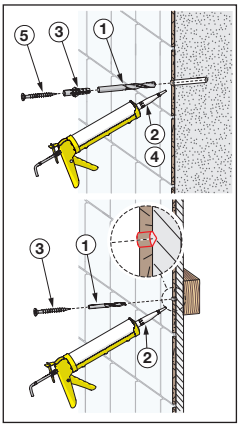

2

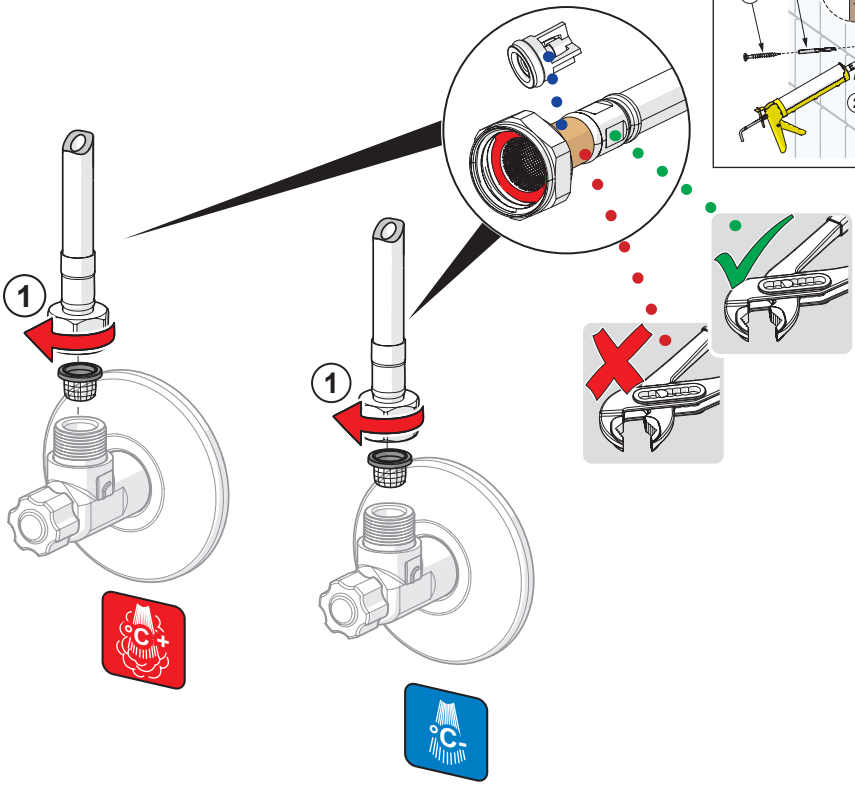

3

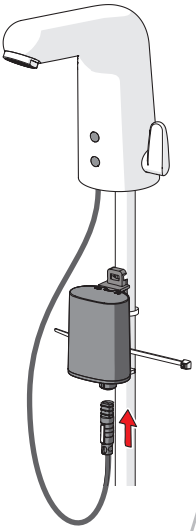

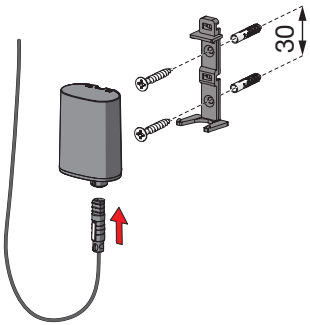

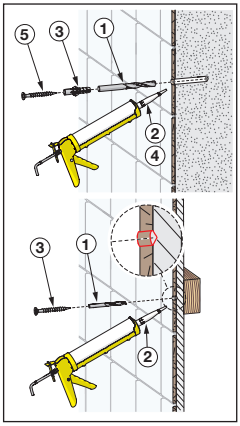

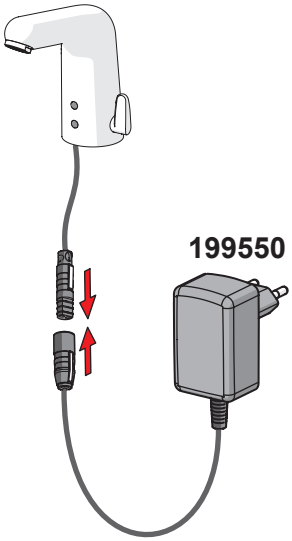

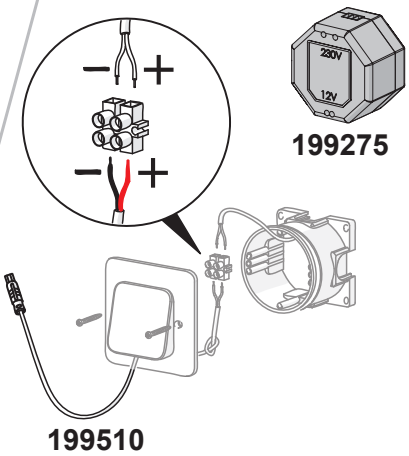

AUTOMATIC

2 s ± 1 s

max. 2 min

Bluetooth®

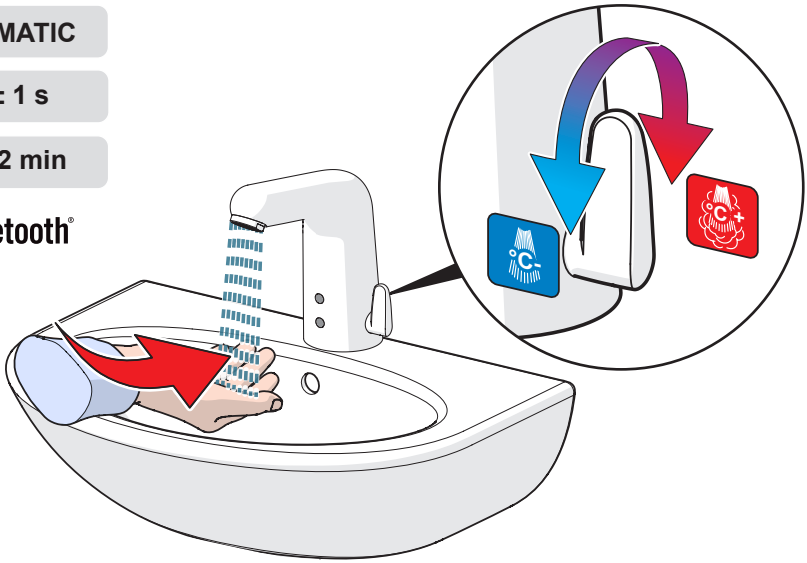

Oras App

Download on the App Store

GET IT ON Google Play

apps.oras.com

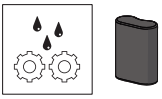

①

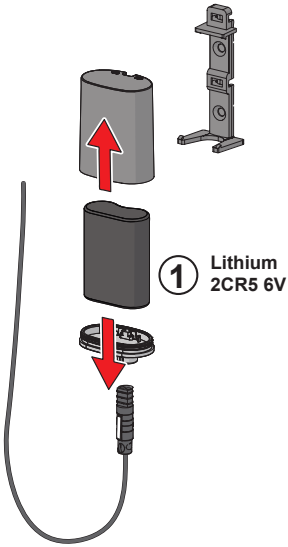

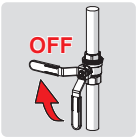

②

③

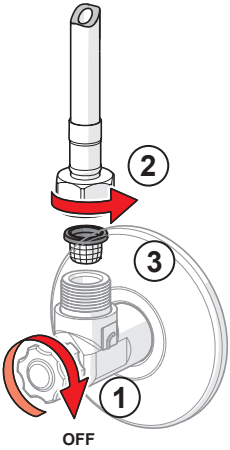

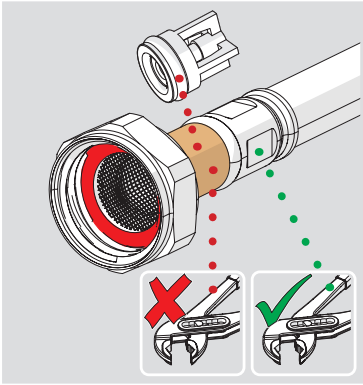

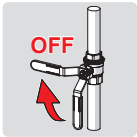

①②③ ⑥ ⑦

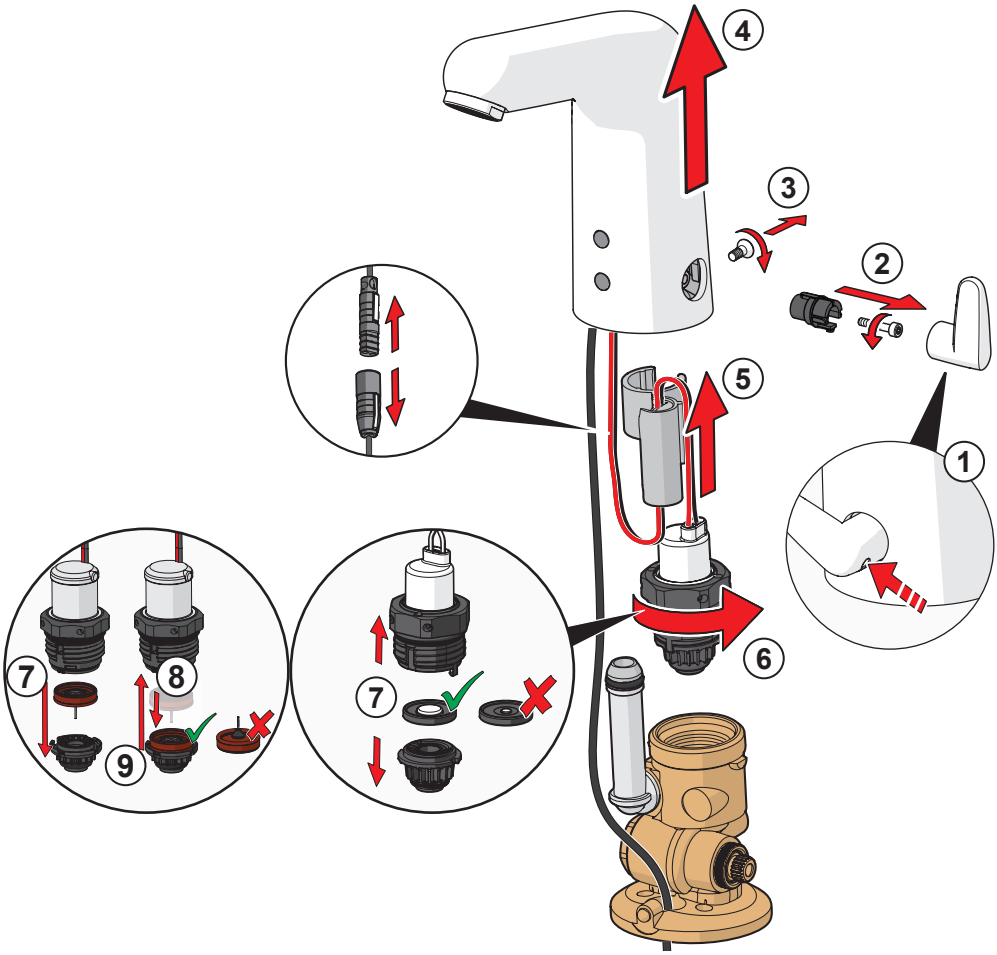

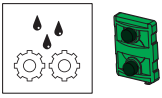

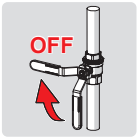
OFF

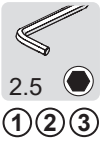
2.5
1 2 3

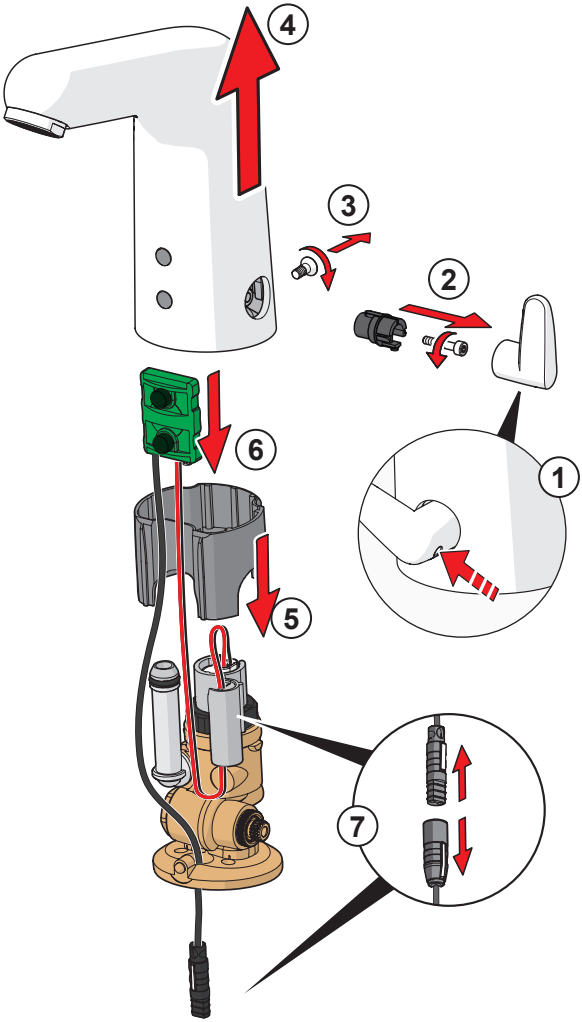
4
3
2
1
6
5
7

①②

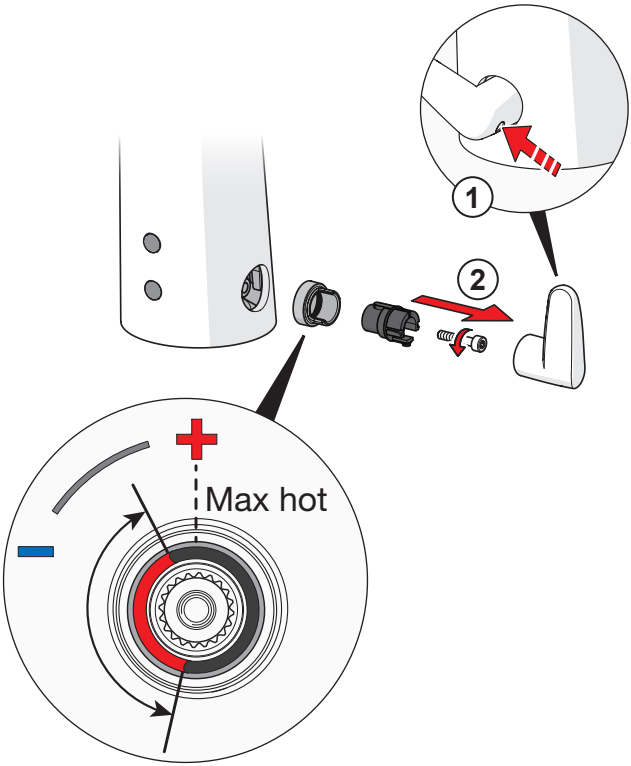

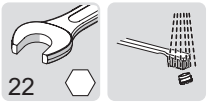

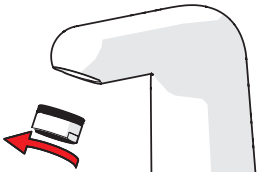

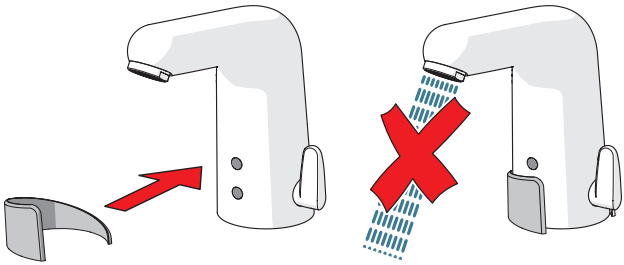

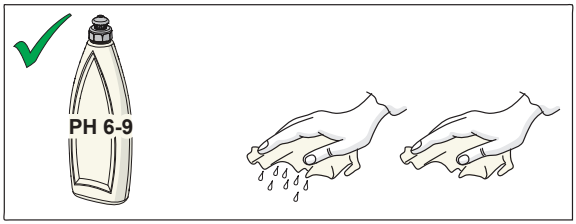

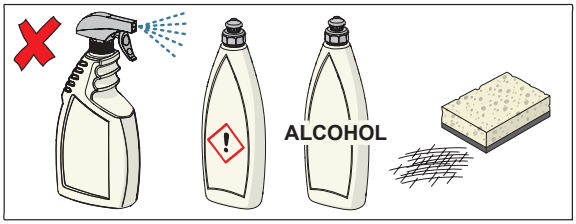

cleaning.oras.com

About Oras Group

Oras Group is a significant European provider of sanitary fittings: the market leader in the Nordics and a leading company in Continental Europe. The company's mission is to create the smartest water experiences for everyone and its vision is to become the Perfect Flow Company. The Group has two strong brands, Oras and Hansa. Oras Group is owned by Oras Invest, a family company, and an industrial owner.

The domicile of Oras Ltd, the parent company of the Group, is located in Rauma, Finland, and the Group has three manufacturing sites: Kralovice (Czech Republic), Olesno (Poland) and Rauma (Finland). The Group operates with its own staff in 17 markets. Oras Group's net sales were 233.5 million euros in 2021 and at the end of the period the company employed 1255 people.

943256-06-23

ORAS Ltd
Isometsäntie 2, P.O. Box 40
FI-26101 Rauma
Tel. +358 2 83 161
Fax +358 2 831 6300
info.finland@oras.com
www.oras.com