Reservdelar ESSVE kompressorer Ingår i reservdelskit. (2 st av varje del.)

901151	T 3. 0,7 Hk. (Dom första exemplaren)
901153	T3. 0,9 Hk
901155	T5,T22,T25-260

Art nr i skiss	KGK art nr	ESSVE art nr	Benämning DK	Benämning UK	T3 (0,7 Hk)	T3 (0,9 Hk)	T/5 260	T 22/260	T 25/260
ES02	NAES02	48911	Skive Esprit	Washer M8		x			
ES03	NAES03	48912	Skrue Esprit	Nut M8		x			
ES04	NAES04	48913	Vibrationsdæmper Esprit	No vibration rubber for T3		x			
ES05	NAES05	48914	Kondensator 25uf Esprit	Condenser 25uF for T3		x			
ES06	NAES06	48915	Ventilator v/motor Esprit	Plastic fan for electric motor for T3		x			
ES07	NAES07	48916	Låsering Eprit	seeger for fixing engine fan		x			
ES08	NAES08	48917	Skærm Esprit	Cover fan and electric motor for T3		x			
ES09	NAES09	48918	Krumtap Esprit	Crank for T3		x			
ES10	NAES10	48919	Leje Esprit	Bearing for T3		x			
ES11	NAES11	48920	Plejlstang Esprit	Connecting-rod diam.60 for T3	x				
ES12	NAES12	48921	Skive Esprit	Washer		x			
ES13	NAES13	48922	Stempel komplet Esprit	Connecting rod Compl diam 60mm	x				
ES14	NAES14	48923	O-ring Esprit	O-ring cylinder		x			
ES15	NAES15	48924	Cylinder Esprit	Cylinder diam. 60mm	x				
ES15-65	NAES15-65	49046	Cylinder Esprit 65	Cylinder diam. 65mm		x			
ES16	NAES16	48925	Skrue Esprit	Screw to fixing cylinder		x			
ES17	NAES17	48926	Stempelring Esprit	Piston seal diam. 60	x				
ES1-65	NAES17-65	49047	Stempelring Esprit 65	Piston seal diam. 65mm		x			
ES18	NAES18	48927	Skrue Esprit	Screw for piston top		x			
ES19	NAES19	48928	Stempel esprit	Piston		x			
ES20	NAES20	48929	Pakning u/plade Esprit	Gasket under valveplate Ø60	x				
ES20-65	NAES20-65	49048	Pakning u/plade Esprit 65	Gasket under valveplate Ø65		x			
ES21	NAES21	48930	Skrue Esprit	Screw for valveplate		x			
ES22	NAES22	48931	Ventilblad Esprit	Valves		x			
ES23	NAES23	48932	Ventilplade Esprit	Valveplate complete Ø60	x				
ES23-65	NAES23-65	49049	Ventilpalde Esprit 65	Valveplate complete Ø65		x			
ES24	NAES24	48933	Skive	Skive for valveplate		x			
ES25	NAES25	48934	Møtrik Esprit	Screw for valveplate		x			
ES26	NAES26	48935	Pakning o/plade Esprit	Top gasket Ø60	x				
ES26-65	NAES26-65	49050	Pakning o/plade Esprit 65	Top gasket Ø65		x			
ES27	NAES27	48936	Topstykke Esprit	Head		x			
ES28	NAES28	48937	Skrue Esprit	Screw for fixing head		x			
ES29	NAES29	48938	Forskruning	connection rest. 1/4"		x			
ES30	NAES30	48939	Leje	Bearing front		x			
ES31	NAES31	48940	Skrue	Screw for fixing crankcase		x			
ES32	NAES32	48941	Flange	Flange		x			
ES33	NAES33	48942	Skrue	Screw for fixing flange		x			
ES34	NAES34	48943	Skive Esprit	Washer M12		x			
ES35	NAES35	48944	Møtrik Esprit	Nut M12		x			
ES36	NAES36	48945	Ventilator v/blok Esprit	Plastic fan for kompressor		x			
ES37	NAES37	48946	Endedæksel Esprit	Cover fan front		x			
ES39	NAES39	48947	Filter Esprit	Filter aspiration		x			
ES40	NAES40	48948	Skrue til endedæksel	Screw for fixing cover fan front		x			
ES41	NAES41	48949	Skrue til skærm Esprit	Screw for fixing cover fan rear		x			
ES42	NAES42	48950	Krumtaphus	Crank case housing		x			
AC010.001	NAES100	48951	Rør Esprit	Tube Esprit		x			
E02	NAE02	48952	Skrue	Screw for electric engine			x	x	x
E03	NAE03	48953	Skærm	Plast cover big			x	x	x
E04	NAE04	48954	Møtrik	Nut for fixzing electric engine			x	x	x
E05	NAE100	48955	Flex rør til 25/11 bar	Alu tube tank 3T I model 1-1,5 cv			x	x	x
E06	NAE06	48956	Kondensator 40uf	Condenser 40uF			x	x	x
E07	NAE07	48957	Skærm motor 25/22S	Cover fan for electric motor			x	x	x
E08	NAE08	48958	Skrue 25/22S	Screw for fixing monobloc			x	x	x
E09+E18	NAE09	48959	Kompressor hus	Compressor monobloc + E18			x	x	x
E10	NAE10	48960	Skrue 25/22S	Screw for fixing compressor monobloc			x	x	x
E11	NAE11	48961	Leje 25/22S	Bearing for compressor monobloc			x	x	x
E12	NAE12	48962	Skive 25/22S	Bearing short 5,5mm			x	x	x
E13	NAE13	48963	Leje	Bearing for connecting rod			x	x	x
E14	NAE14	48964	krumtap	Eccentric			x	x	x
E15	NAE15	48965	Skive 25/22S	Bearing high 7,0mm			x	x	x
E18+E09	NAE09	48966	Kompressor hus	Compressor monobloc +E9			x	x	x
E19	NAE19	48967	Skive	Washer			x	x	x
E20	NAE20	48968	Møtrik	Nut M16			x	x	x
E21	NAE21	48969	Bolt 25/22S	Stud bolt			x	x	x
E22	NAE22	48970	Skrue	Screw for cover fan					
E25	NAE25	48971	Skrue til topstykke	Screw for fixing head			x	x	x
E27	NAE27	48972	Topstykke	Head			x	x	x
E28	NAE28	48973	Filter	Top filter			x	x	x
E29	NAE29	48974	Skrue stempel top	Screw for piston top					
E30	NAE30	48975	Pakning til ventilplade (øverst)	Top gasket 70mm			x	x	x
E31	NAE31	48976	Møtrik til ventilplade	Nut for valve plate			x	x	x
E32	NAE32	48977	Skive til ventilplade	Washer for valve plate			x	x	x
E33	NAE33	48978	Skrue til ventilplade	Screw for valve plate			x	x	x
E34	NAE34	48979	Vinkel udgang	Air exit connector L			x	x	x
E35	NAE35	48980	Ventilplade komplet	Valve plate complete			x	x	x
E36	NAE36	48981	Ventilblad	Valve			x	x	x
E37	NAE37	48982	Cylinder gasket	Cyl gasket					
E38	NAE38	48983	Cylinder	Cyl chrome high 35,5 diam 60mm					
E39	NAE39	48984	O-ring til cylinder	Cylinder O-ring			x	x	x
E40	NAE40	48985	Top ring stempel	Piston top 60mm					
E41	NAE41	48986	Stempelring	Piston seal 60mm					
E42	NAE42	48987	Plejlstang	Connectingf rod 60mm					
E44	NAE44	48988	o-ring	O-ring for compressor monobloc			x	x	x
E45	NAE45	48989	Skrue 25/22S	Screw for compr monobloc			x	x	x
E49	NAE49	48990	Skrue til cylinder/topstykke	Screw for head cyl 70mm			x	x	x
E50	NAE50	48991	Pakning til ventilplade (nederst)	Cyl gasket 70mm			x	x	x
E51	NAE51	48992	Cylinder 25/22S	Cyl chrome high diam 70mm			x	x	x
E52	NAE52	48993	Skrue topstykke	Screw piston top cyl diam 70mm			x	x	x
E53	NAE53	48994	Plade til stempel	Piston top diam 70mm			x	x	x
E54	NAE54	48995	Stempelring ø70mm 2hk 1400 omdr.	Piston seal diam 70mm			x	x	x
E55	NAE56	48996	Plejstang komplet 25/22S	Connecting rod Compl diam 70mm			x	x	x
E57	NAE57	48997	Ventilator gitter (inderst)	Metal wire -inner			x	x	x
E58	NAE58	48998	Skrue til gitter	Screw for metal wire			x	x	x
E59	NAE59	48999	Ventilator	Plastic fan			x	x	x
E60	NAE60	49000	Skærm	Metal cover fan			x	x	x
E61	NAE61	49001	Skrue til skærm	Screw for cover fan			x	x	x
E62	NAE62	49002	Ventilator gitter (yderst)	Metal wire -outer			x	x	x
E63	NAE63	49003	Vibrationsdæmper	No vibration rubber			x	x	x
E69	NAE69	49004	Ventilator gitter inderst	Metal wire -inner					
E70	NAE70	49005	Ventilator højre	Metal fan right					
E71	NAE71	49006	Ventilator venstre	Metal fan left					
E72	NAE72	49007	Skærm	Metal cover fan					
E73	NAE73	49008	Ventilator gitter yderst	Metal wire -outer					
E74	NAE74	49009	Rør samling	Alu connection + fitting for ext 4					
E75	NAE75	49010	Flex rør	Flexible pipe for Q22					
AC024.011	NAE102	49011	Låsekapsel til hjul 25/11 bar	Hub cap/wheel lock				x	x
AC008.002	NAE105	49012	Kontraventil	Non return valve			x	x	x
AC006.001	2385512	49013	Kobling 3/8" UG till slanguttag	Coupler				x	
AC006.001	2385510	49014	Kobling 1/4" UG	Coupler for air hose		x	x		x
AC004.002	4385094	49015	Reduktionsventil 1/4"	Pressure reducer valve 1/4"		x	x		
AC004.002	4385095	49016	Reduktionsventil 3/8"	Pressure reducer valve 3/8"				x	
AC004.002	4385071	49017	Reduktions ventil/med vandudskiller 1/4"	Pressure reducer valve with water filter					x
AC024.009	7260190000	49018	Hjul Punkterfri	Airless rubber wheel				x	x
AC009.001	NAAC009.001	49030	Gummi fod	Foot T3		x			
AC009.004	7360030000	49019	Gummi fod	Foot					x
AC007.005	N-1003	49020	Kuglehane 3/8"	Ball cock 3/8"				x	x
Ac007.001	6004880014	49021	vandaftapning 1/4"	Discharge tap 1/4"		x	x		
AC001.002	7250220000	49022	Pressostat	Pressure switch		x			
AC001.00_x	7250220000	49022	Pressostat	Pressure switch			x	x	x
AC003.00_x	2381010	49023	Sikkerhedventil 1/4"	Safety valve		x	x	x	x
AC005.001	2381200	49024	Manometer 1/8" lille	Pressure gauge 1/8"		x	x	x	x
AC005.006	2381240	49025	Manometer 1/4"stor	Pressure gauge 1/4"		x	x	x	x
AC010.001	NAAC010.001	49026	Omløber til slange 8,5 mm	clip for tube8,5mm		x			
AC008.001	NAAC008.001	49027	Kontraventil	Non return valve		x			
AC008.004	7041020000	49028	Skærering afl. Slange	Ogive for tube		x	x	x	x
AC008.005	7024070000	49029	Omløber afl. slange	Nut for tube		x	x	x	x
AC011.001	7230010000	49039	Afl. slange	Tubu blue T3		x			
AC011.006	7230010000	49031	Afl. slange	Tubu blue			x	x	x
AC021.002	7082040000	49036	Union koppl V4	Special nut for pressure switch		x	x	x	x
AC021.001	7082040000	49037	Ihop med AC021.002	Together with AC021.002		x	x	x	x
AC014.002	2381880	49033	Prop 1/4"	Plug 1/4"		x			
AC015.002	2381800	49034	Brystnippel 1/4'x1/4'	Nippel1/4"		x	x	x	x
AC002.00_x	7329070000	49038	stik med Kabel 230V.	Pin Plug		x	x	x	x
AC017.005	2381846	49035	Vinkel 1/4'IG x 1/4'UG	Forged Elbow filling 1/4" male -female		x			
AC013.001	NAAC013.001	49032	Håndtag	Rubber knob		x			
AC022.001	2381890	49040	Kryds	Forged Cross			x		
	2381808	49041	Brystnippel 3/8"UGx1,2"IG	Nut for pressure reducer T22					
	2381848	49042	Vinkel 1/2"	Forged rigt angle AMP T22, Q22				x	
	2381863	49043	T-stk 1/2"	Forged angle AMP T22, Q22			x		
	2385514	49044	Kobling till luftslang	Quick coupler AMP T22, Q22				x	
	7260020050	49045	Hjul T5/260	Wheel T5/260X			x		

Spare Parts AMP T3/210

(0,7 Hk = 60 mm Cylinder/Kolv. 0,9 Hk = 65 mm Cylider/Kolv.)

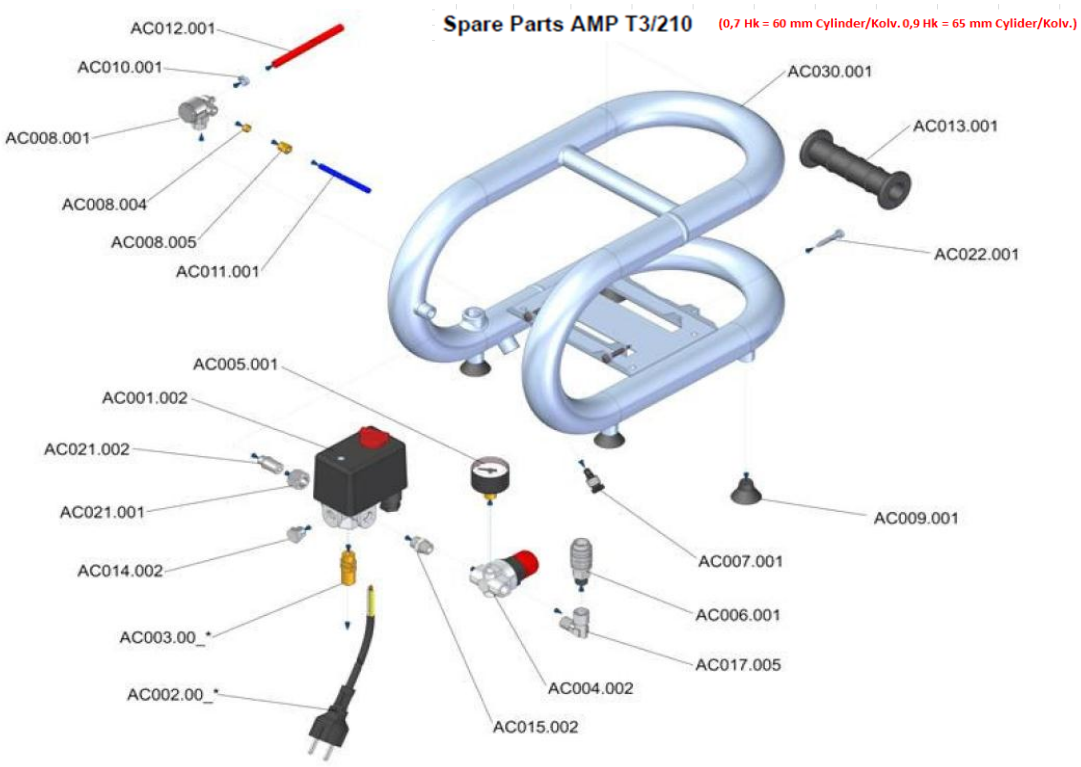

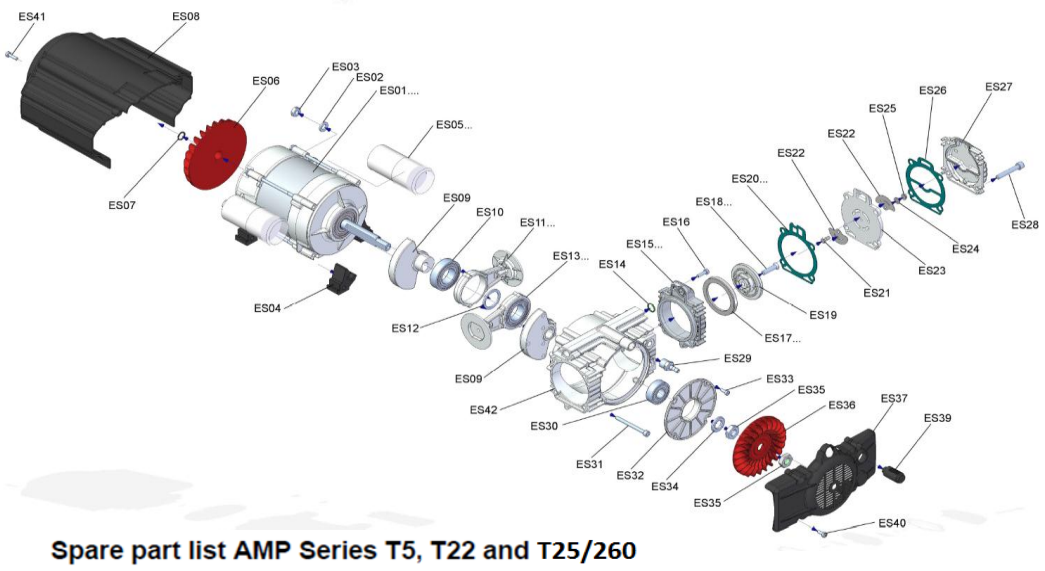
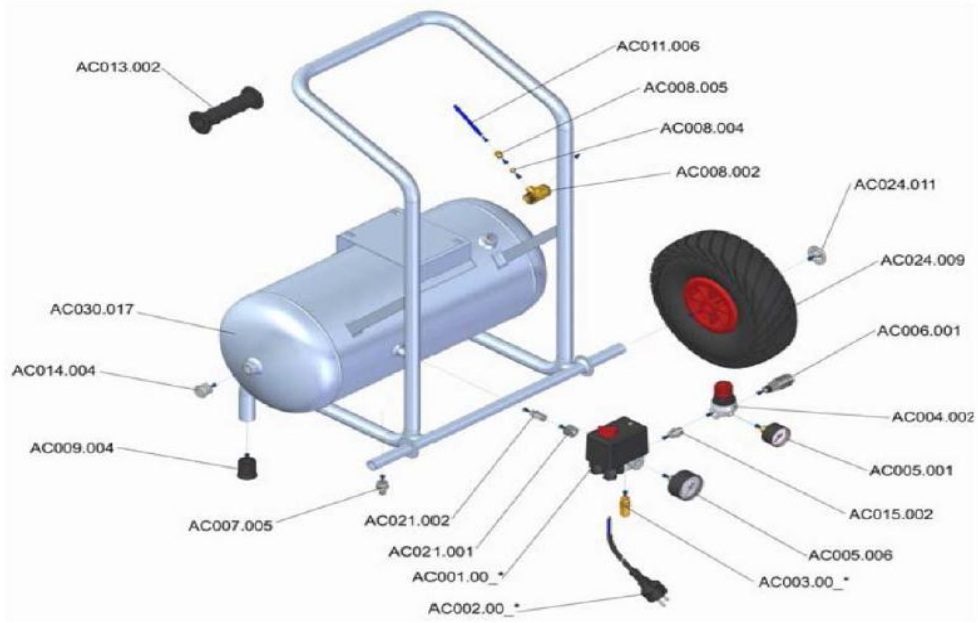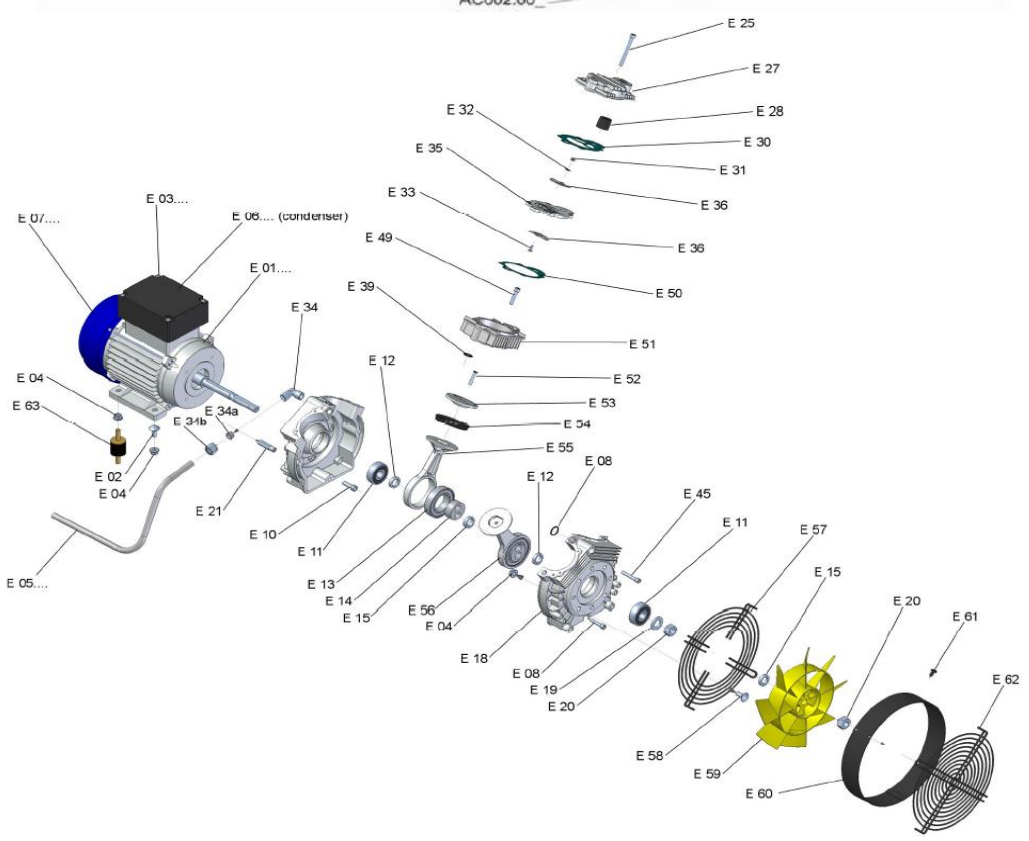
Spare part list AMP Series T5, T22 and T25/260