Deutsches Institut für Bautechnik DIBt

Member of EOTA www.eota.eu

Approval body for construction products and types of construction

Bautechnisches Prüfamt

An institution established by the Federal and Laender Governments

Designated according to Article 29 of Regulation (EU) No 305/2011 and member of EOTA (European Organisation for Technical Assessment)

European Technical Assessment

ETA-12/0456 of 27 November 2017

English translation prepared by DIBt - Original version in German language

General Part

Technical Assessment Body issuing the European Technical Assessment:	Deutsches Institut für Bautechnik
Trade name of the construction product	fischer aircrete anchor FPX-I
Product family to which the construction product belongs	Metal expansion fastener for use in autoclaved aerated concrete
Manufacturer	fischerwerke GmbH & Co. KG Klaus-Fischer-Straße 1 72178 Waldachtal DEUTSCHLAND
Manufacturing plant	fischerwerke
This European Technical Assessment contains	12 pages including 3 annexes which form an integral part of this assessment
This European Technical Assessment is issued in accordance with Regulation (EU) No 305/2011, on the basis of	EAD 330014-00-0601

electronic copy of the eta by dibt: eta-12/0456

The European Technical Assessment is issued by the Technical Assessment Body in its official language. Translations of this European Technical Assessment in other languages shall fully correspond to the original issued document and shall be identified as such.

Communication of this European Technical Assessment, including transmission by electronic means, shall be in full. However, partial reproduction may only be made with the written consent of the issuing Technical Assessment Body. Any partial reproduction shall be identified as such.

This European Technical Assessment may be withdrawn by the issuing Technical Assessment Body, in particular pursuant to information by the Commission in accordance with Article 25(3) of Regulation (EU) No 305/2011.

electronic copy of the eta by dibt: eta-12/0456

Specific Part

1 Technical description of the product

The fischer aircrete anchor FPX-I is a deformation controlled expansion anchor made of galvanised steel. The anchor consists of an internal threaded socket, a cone bolt and an expansion sleeve. The anchor transfers loads into autoclaved aerated concrete via mechanical interlock.

The anchor is set into a predrilled bore hole and anchored with a hexagon installation tool until the installation tool is pushed out of the internal hexagon socket. The fixture is installed with a screw-in part (threaded rods or screw).

The product description is given in Annex A.

2 Specification of the intended use in accordance with the applicable European assessment Document

The performances given in Section 3 are only valid if the anchor is used in compliance with the specifications and conditions given in Annex B.

The verifications and assessment methods on which this European Technical Assessment is based lead to the assumption of a working life of the anchor of at least 50 years. The indications given on the working life cannot be interpreted as a guarantee given by the producer, but are to be regarded only as a means for choosing the right products in relation to the expected economically reasonable working life of the works.

3 Performance of the product and references to the methods used for its assessment

3.1 Mechanical resistance and stability (BWR 1)

Essential characteristic	Performance
Resistance in any load direction without lever arm	See Annex C 1
Resistance in any load direction with lever arm	See Annex C 1
Spacing, edge distance, member thickness	See Annex B 3 and B 4
Displacements	See Annex C 2
Durability	Durability is ensured if the specifications of intended use according to Annex B are taken into account.

3.2 Safety in case of fire (BWR 2)

Essential characteristic	Performance
Reaction to fire	The anchor satisfy requirements for Class A1
Resistance to fire	No performance assessed

electronic copy of the eta by dibt: eta-12/0456

4 Assessment and verification of constancy of performance (AVCP) system applied, with reference to its legal base

In accordance with European Assessment Document EAD No. 330014-00-0601, the applicable European legal act is: [96/582/EC].

The system(s) to be applied is (are): 1

5 Technical details necessary for the implementation of the AVCP system, as provided for in the applicable European Assessment Document

Technical details necessary for the implementation of the AVCP system are laid down in the control plan deposited with Deutsches Institut für Bautechnik.

Issued in Berlin on 27 November 2017 by Deutsches Institut für Bautechnik

BD Dipl.-Ing. Andreas Kummerow
Head of Department

beglaubigt:
Baderschneider

electronic copy of the eta by dibt: eta-12/0456

Product description

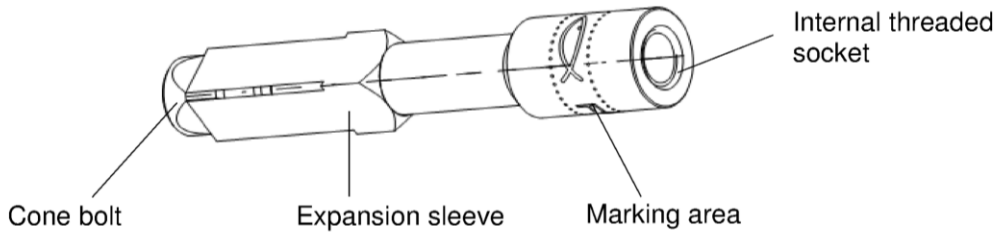

Product installed

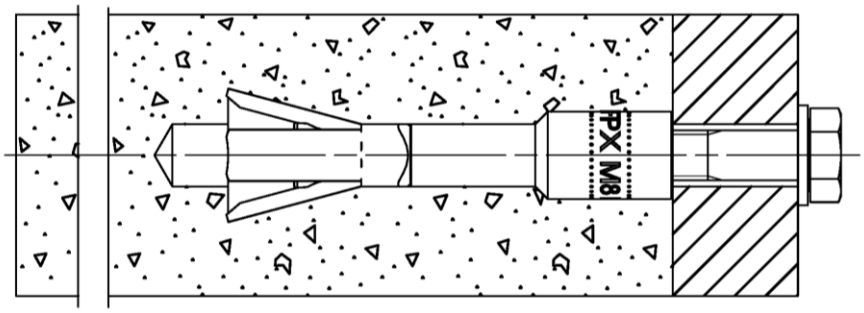

Product label

Product label, example: FPX-I M8

Brand | type of fastener — Thread size / identification

Product dimensions

Table A1.1: Dimension [mm]

Anchor type			FPX-I			
Internal thread			M6	M8	M10	M12
Anchor length	L	=	75			
Diameter head internal threaded socket	Ø D	=	14			16
Diameter cone bolt	Ø d_c	=	11			

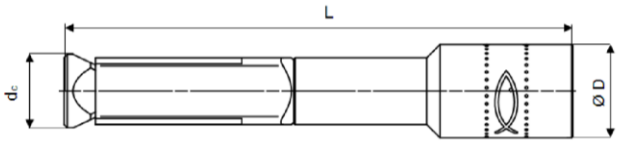

fischer aircrete anchor FPX-I

Product description
Description, label and dimension

Annex A 1

electronic copy of the eta by dibt: eta-12/0456

Specifications of intended use

fischer aircrete anchor FPX-I	M6	M8	M10	M12
Galvanized steel				
Static and quasi-static loads		✓		
Cracked and uncracked Autoclaved Aerated Concrete (AAC)				

Base material:

- Cracked reinforced slabs (uncracked slabs are included) according to EN 12602:2016 of
  strength class $f_{AAC} \geq 3{,}3$ N/mm² with dry density $\rho_m \geq 0{,}50$ kg/dm³ and
  strength class $f_{AAC} \geq 4{,}4$ N/mm² with dry density $\rho_m \geq 0{,}55$ kg/dm³
- Uncracked reinforced slabs according to EN 12602:2016 of
  strength class $f_{AAC} \geq 1{,}6$ N/mm² with dry density $\rho_m \geq 0{,}25$ kg/dm³ to
  strength class $f_{AAC} \geq 6{,}0$ N/mm² with dry density $\rho_m \geq 0{,}65$ kg/dm³
- Masonry units according to EN 771-4: 2003 of
  strength class $f_{AAC} \geq 1{,}6$ N/mm² with dry density $\rho_m \geq 0{,}25$ kg/dm³ to
  strength class $f_{AAC} \geq 6{,}0$ N/mm² with dry density $\rho_m \geq 0{,}65$ kg/dm³
- The mortar strength class of the masonry has to be M 2,5 according to EN 998-2:2010 at minimum

Use conditions (Environmental conditions):

- Structures subject to dry internal conditions (FPX-I)

Design:

- Anchorages are to be designed under the responsibility of an engineer experienced in anchorages and concrete and masonry work
- Verifiable calculation notes and drawings are to be prepared taking account in the loads to be anchored. The position of the anchor is to be indicated on the design drawings
- Design of fastenings according to TR 054, Design Method B.

Table B1.1: Material

Designation	**FPX-I**
Cone bolt [1)]	Steel strength; $f_{uk} \geq 800$ N/mm², $f_{yk} \geq 640$ N/mm²
Expansion sleeve [1)]	$f_{uk} \geq 450$ N/mm², $f_{yk} \geq 360$ N/mm²
Internal threaded bolt [1)]	$f_{uk} \geq 450$ N/mm², $f_{yk} \geq 360$ N/mm²
Screw-in-parts [1, 2)]	Minimum steel strength class 4.8, DIN EN ISO 898-1

[1)] Galvanized according to EN ISO 4042, ≥ 5 µm
[2)] Screw-in parts (screws and threaded rods including nuts and washer) must comply with the specification in Annex C1.

electronic copy of the eta by dibt: eta-12/0456

fischer aircrete anchor FPX-I

Intended use
Specifications

Annex B 1

Table B2.1: Installation parameters

Size					FPX-I M6	FPX-I M8	FPX-I M10	FPX-I M12
Nominal drill hole diameter		d_0	=		10			
Maximum drill bit diameter		d_{cut}	≤		10,45			
Depth of drill hole to deepest point	with cleaning [1]	h_1	≥	[mm]	80			
	without cleaning				95			
Diameter of clearance hole in the fixture		d_f	≤		7	9	12	14
Effective embedment depth		h_{ef}	=		70			
Maximum fastening torque [2]		T_{max}		[Nm]	3			
Screw-in depth internal thread		$l_{s,min}$		[mm]	6	8	10	12
		$l_{s,max}$			15			

[1] For member thickness h < 120 mm the drill hole shall be cleaned and the depth of the drill hole shall be reduced to 80 mm in order to avoid damage on the opposite side of the wall
[2] If the anchor cannot retain against the fixture no installation torque may be applied (T_{max} = 0 Nm)

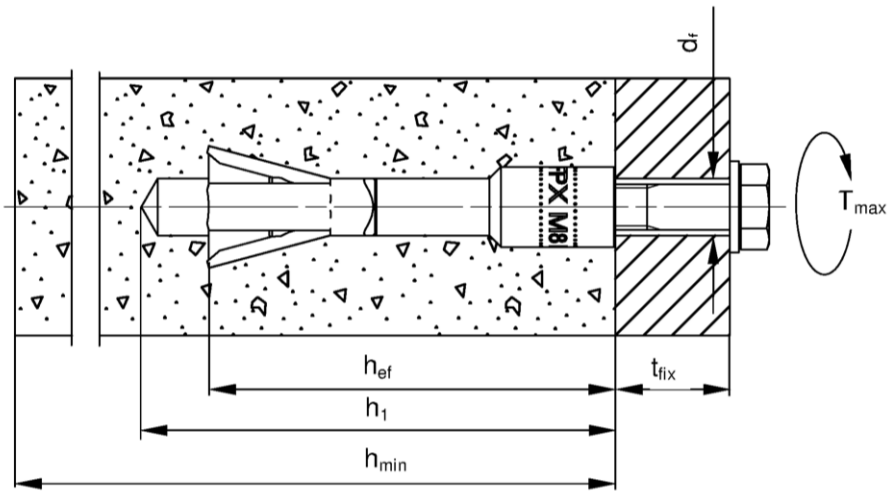

h_{ef} = Effective embedment depth
t_{fix} = Thickness of fixture
h_1 = Depth of drill hole to deepest point
h_{min} = Minimum thickness of AAC member
T_{max} = Maximum setting torque
d_f = Diameter of clearance hole in the fixture

electronic copy of the eta by dibt: eta-12/0456

fischer aircrete anchor FPX-I

Intended use
Installation parameters

Annex B 2

Table B3.1: Minimum member thickness, minimum spacing and edge distance in AAC - **slabs**

Size				FPX-I			
				M6	M8	M10	M12
Minimum thickness of AAC - **slab**	with cleaning [1]	h_{min}	[mm]	100			
	without cleaning			120			
Minimum spacing		s_{min}		100			
Minimum edge distance	single anchor [2]	c_1		125 [5]			
	anchor groups [3]			250			
Minimum edge distance, orthogonal to c_1		c_2		1,5 x c_1			
Minimum spacing between	single anchors	a		600			
	anchors groups [3] [4]			750			

[1] For member thickness h < 120 mm the drill dust has to be cleaned out of the hole and the depth of the drill hole has to be reduced to 80 mm in order to avoid damage on the opposite side of the slab
[2] Maximum 2 single anchors in the same formation as anchor groups. For 2 single anchors with spacing smaller than 600 mm (s_{min} ≥ 100 mm) the same spacing in between and edge distances (a; c_1) like for the anchor group are valid
[3] For exclusive tension loads the spacing and edge distances for groups can be reduced to the spacing and edge distances of single anchors
[4] If there is no (free) edge, or the edge distance is ≥ a, the spacing between anchor groups can be reduced to the spacing between single anchors
[5] The edge distance of reinforced slabs with a width ≤ 700 mm has to be ≥ 150 mm

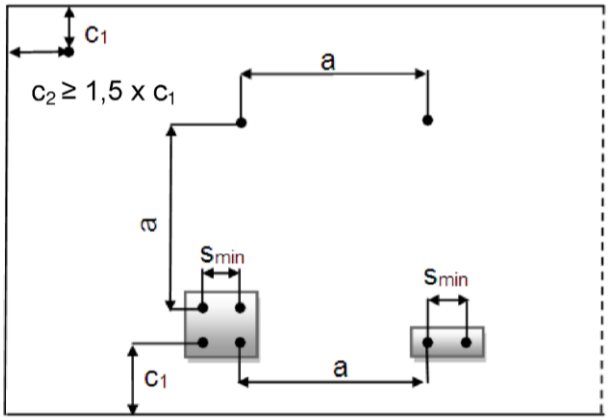

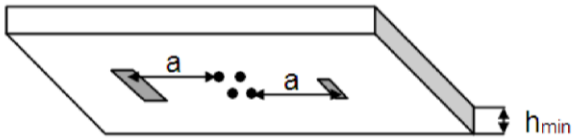

electronic copy of the eta by dibt: eta-12/0456

fischer aircrete anchor FPX-I

Intended use
Minimum member thickness, minimum spacing and edge distance in AAC slabs

Annex B 3

Table B4.1: Minimum member thickness, minimum spacing and edge distance in AAC - **masonry**

Size				FPX-I M6	FPX-I M8	FPX-I M10	FPX-I M12
Minimum thickness of AAC - **masonry**	with cleaning [1]	h_{min}	[mm]	100			
	without cleaning			120			
Minimum spacing		s_{min}		100			
Minimum distance to non-filled joints, single anchor		c_F		0 [5] / 75 [6] / 125 [7]			
Minimum edge distance	single anchor [2]	c_1		125			
	anchor groups [3]			250			
Minimum edge distance, orthogonal to c_1		c_2		1,5 x c_1			
Minimum spacing between	single anchors [2]	a		375			
	anchors groups [3] [4]			750			

[1] For member thickness h < 120 mm, the drill hole shall be cleaned and the depth of the drill hole shall be reduced to 80 mm in order to avoid damage on the opposite side of the wall
[2] Maximum 2 single anchors in the same formation as the anchor groups. For 2 single anchors with spacing smaller than 375 mm (s_{min} ≥ 100 mm) the same spacing in between and edge distances (a; c_1) like for the anchor group are valid
[3] For exclusive tension loads the spacing and edge distances of anchor groups can be reduced to the spacing and edge distances of single anchors
[4] If there is no edge, or the edge distance is ≥ a, the spacing between anchor groups can be reduced to the spacing between single anchors
[5] For joints completely filled with mortar and a joint width ≤ 12 mm and a compressive strength according to EN 998-2 ≥ f_{AAC} AAC no distances to joints are required
[6] c_F for only tension and /or shear loads parallel to the joints which are not filled with mortar and a joint width ≤ 2 mm
[7] c_F = c_1 for shear load or with a part of the load orthogonal to the jont which are not filled with mortar and a joint width ≥ 0 mm

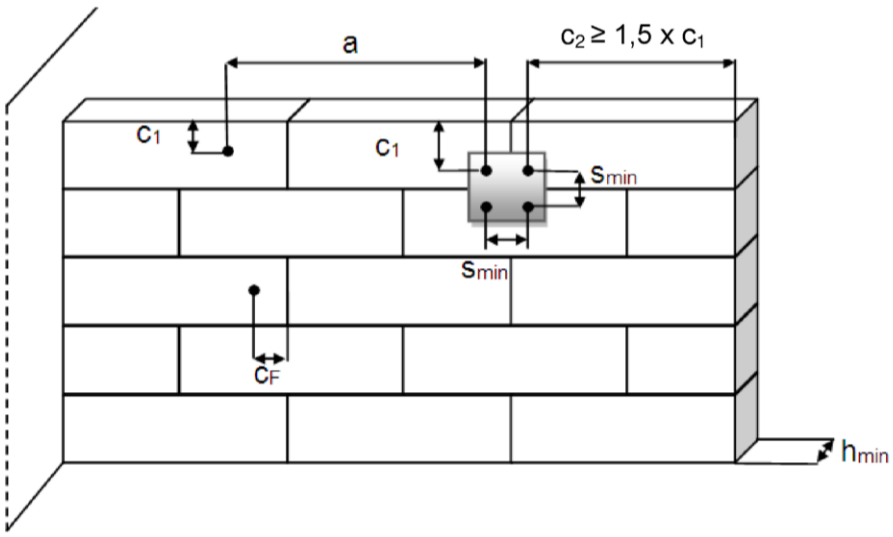

fischer aircrete anchor FPX-I

Intended use
Minimum member thickness, minimum spacing and edge distance in AAC masonry

Annex B 4

electronic copy of the eta by dibt: eta-12/0456

Installation instruction

- Anchor installation carried out by appropriately qualified personnel and under the supervision of the person responsible for technical matters of the site
- Use of the anchor only as supplied by the manufacturer without exchanging the components of the anchor
- Checking before placing the anchor to ensure that the strength class of the aircrete in which the anchor is to be placed is in the range given and is not lower than that of the aircrete to which the characteristic loads apply
- Drill hole created perpendicular +/- 5° to AAC surface, positioning without damaging the reinforcement
- In case of aborted hole: New drilling at a minimum distance away of twice the depth of the aborted hole or smaller distance if the aborted hole is filled with non-shrinkage, high strength mortar (pressure strength ≥ 30 N/mm^2) and if under shear or oblique tension load it is not the direction of the load application

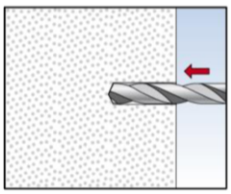	1: Drill the hole. Other methods like punching, to make the hole, are allowed. When the AAC is covered with a hard layer like tiles, the tile has to be drilled with minimum diameter of the head of the internal threaded bolt ø D
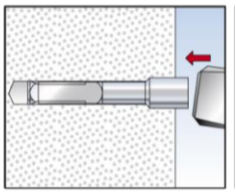	2: Set the fastener until it is flush with the surface of the AAC
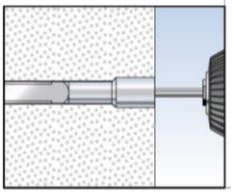	3: Turning the internal thread bolt with the hexagon (approximately 15 turnings are required) Setting tool for FPX-I M6 Setting tool for FPX-I M8 – M12
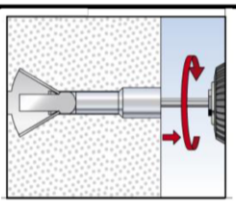	4: By turning the internal thread bolt, the cone is driven into the expansion sleeve. When the optimal expansion is reached, the hexagon is thrown out of the socket. **The turning of the internal thread bolt until the hexagon is thrown out of the socket is compulsory** if tightening is impossible the anchor cannot be loaded
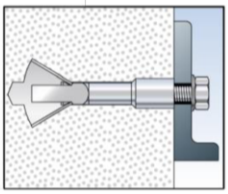	5a: Optional tightening the fastener with a torque T_{max} ≤ 3 Nm. The anchor could be pulled against the fixture depending on the compressive strength of the AAC.
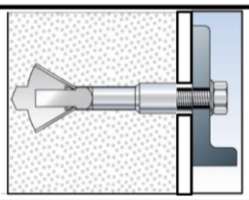	5b: If the anchor cannot support against the fixture (with cover layer) no installation torque may be applied (T_{max} = 0)

fischer aircrete anchor FPX-I	**Annex B 5**
Intended use Installation instructions	

electronic copy of the eta by dibt: eta-12/0456

Table C1.1: Characteristic resistance for all load directions

Size				FPX-I M6	FPX-I M8	FPX-I M10	FPX-I M12
Single anchor in AAC - slabs [1]							
Characteristic resistance in cracked AAC - slabs	F_{Rk} [kN]	$f_{AAC} \geq 3{,}3$, $\rho_m \geq 0{,}50$		1,5			
		$f_{AAC} \geq 4{,}4$, $\rho_m \geq 0{,}55$		2,0			
Characteristic resistance in uncracked AAC - slabs		$f_{AAC} \geq 3{,}3$, $\rho_m \geq 0{,}50$		2,0			
		$f_{AAC} \geq 4{,}4$, $\rho_m \geq 0{,}55$		3,0			
Partial safety factor for AAC - slabs		γ_{MAAC} [2]		1,73			
Single anchor in AAC - masonry [1]							
Characteristic resistance in AAC - masonry [3] Intermediate values by linear interpolation	F_{Rk} [kN]	$f_{AAC} \geq 1{,}6$, $\rho_m \geq 0{,}25$		0,9			
		$f_{AAC} \geq 2{,}0$, $\rho_m \geq 0{,}35$		1,2			
		$f_{AAC} \geq 4{,}0$, $\rho_m \geq 0{,}50$		2,5			
		$f_{AAC} \geq 6{,}0$, $\rho_m \geq 0{,}65$		4,0			
Partial safety factor for AAC - masonry		γ_{MAAC} [2]		2,0			
Single anchor in AAC - slabs and AAC - masonry [1]							
Characteristic bending resistance with lever arm in combination with screw / threaded rod complying with:	ISO 898-1: 2013	$M_{Rk,s}$ [Nm]	4.8	6	15	30	52
			5.8	8	19	37	65
			6.8	9	23	44	78
			8.8	12	30	60	105
Partial safety factor for AAC - masonry		γ_{Ms}		1,25			
Anchor groups in cracked and uncracked AAC - slabs and AAC - masonry with n = 2 to n = 4 anchors [3]							
Characteristic resistance for n = 2, n = 4 [4] $s_{min} \geq 100$ mm, $c_1 \geq 250$ mm [5]	$F_{Rk,n}$ [kN]			2 x F_{Rk}			
Characteristic resistance for n ≥ 3 $s_{min} \geq 140$ mm, $c_{min,\ anchor\ group} \geq 700$ mm [5]				n x F_{Rk}			
Characteristic resistance redundancy when the joints are not visible [5]	$F_{Rk,n,Redundancy}$			0,5 x $F_{Rk,n}$			
Partial safety factor for AAC - slabs		γ_{MAAC} [2]		1,73			
Partial safety factor for AAC - masonry		γ_{MAAC} [2]		2,0			

[1] Maximum 2 single anchors in the same formation as the anchor groups. For 2 single anchors with spacing smaller than a ($s_{min} \geq 100$ mm) the characteristic resistance of the anchor group is decisive
[2] The installation safety factor $\gamma_2 = 1{,}0$ is included
[3] The evaluation of $N_{Rk,pb}$ according to TR 054, Section 4.2.1.5 is necessary. The smaller value of $N_{Rk,pb}$ and F_{Rk} is decisive
[4] Rectangular arrangement according to drawing Annex B3 and B4
[5] Only for multiple use according to ETAG 001 Part 6

The characteristic strength class f_{AAC} [N/mm²] and the characteristic dry density ρ_m [kg/dm³] have to comply with EN 771-4:2011+A1:2015 for AAC - masonry and EN 12602:2016 for AAC - slabs

fischer aircrete anchor FPX-I

Performances
Characteristic resistance for all load directions

Annex C 1

electronic copy of the eta by dibt: eta-12/0456

Table C2.1: Displacement under tension loads, shear loads and oblique loads in AAC [1)]

Size		FPX-I M6	FPX-I M8	FPX-I M10	FPX-I M12
Displacement tension load in **cracked** AAC for all AAC strength classes	δ_{N0} [mm]	1,0			
	$\delta_{N\infty}$ [mm]	2,0			
Displacement tension load in **uncracked** AAC for all AAC strength classes	δ_{N0} [mm]	1,0			
	$\delta_{N\infty}$ [mm]	1,0			
Displacement shear load in **cracked and uncracked** AAC $f_{AAC} = 1{,}6 - \rho_m \geq 0{,}25$ [2)]	δ_{V0} [mm]	2,5			
	$\delta_{V\infty}$ [mm]	3,7			
Displacement shear load in **cracked and uncracked** AAC $f_{AAC} \geq 6{,}0 - \rho_m \geq 0{,}65$ [2)]	δ_{V0} [mm]	5,0			
	$\delta_{V\infty}$ [mm]	7,3			

[1)] Displacement at service load level $F_{Rk} / (\gamma_{MAAC} \times 1{,}4)$
[2)] Intermediate values by linear interpolation, taking in account the AAC strength

electronic copy of the eta by dibt: eta-12/0456