An Illinois Tool Works Company
150, Route de Lyon
F - 26500 Bourg-lès-Valence - France

916312-2 02/24

IM65 F16 LITHIUM

Part No. 916576 (EU)
Part No. 916575 (UK)

IM65A F16 LITHIUM

Part No. 916276 (EU)
Part No. 916275 (UK)

IMPORTANT!
DO NOT DESTROY
Always refer to operating and safety instructions **(#916310 & #014749)** for detailed information on this tool. It is the customer's responsibility to have all operators and service personnel read and understand this information.

TOOL SCHEMATIC AND PARTS

IM65A F16 LITHIUM

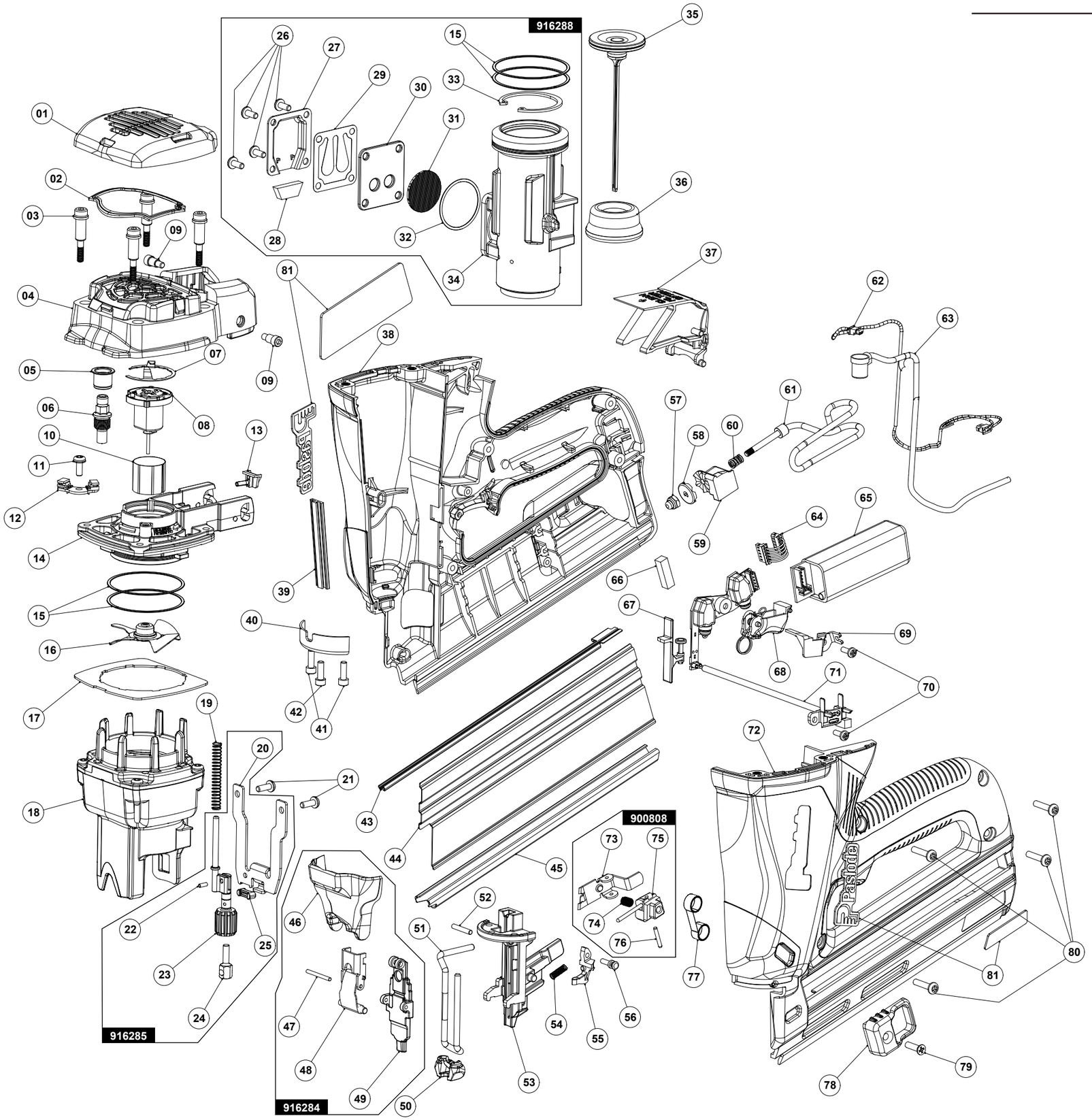

PART LEGEND

Part No. 916276 (EU)
Part No. 916275 (UK)

REP	CODE	QUANTITY	DESCRIPTION
01	916222	1	GRILLE
02	900648	1	FILTER
03	901064	4	SHOULDER SCREW #8-32 X 1-3/8"
04	916241	1	CAP
05	916249	1	INSULATOR
06	916236	1	SPARK PLUG ASSEMBLY
07	901119	1	RETAINING RING
08	901112	1	FAN MOTOR ASSEMBLY WITH RING
09	916257	2	SCREW, SHC
10	321590	1	MOTOR SLEEVE
11	900596	1	SEMS SCREW, TORX
12	900739	1	CYLINDER HEAD CIRCUIT BOARD ASSEMBLY
13	900697	1	STEM ADAPTER
14	916246	1	CYLINDER HEAD,ON-CAN
15	900612	4	SEAL RING
16	900709	1	FAN ASSEMBLY
17	900700	1	AIR DAM
18	900729	1	COMBUSTION CHAMBER
19	916239	1	SPRING, YOKE GUIDE
20	916214	1	YOKE
21	900746	2	SCREW, #8-32 X 7/16"
22	900734	1	ROLL PIN
23	916227	1	YOKE GUIDE AND DOD ASSEMBLY
24	916212	1	DOD STUD
25	916248	1	YOKE BUMPER
26	405140	4	SCREW #8-32 X 3/8" (RED)
27	900668	1	MUFFLER COVER
28	900609	1	MUFFLER
29	900664	1	REED VALVE
30	900665	1	REED PLATE
31	901089	1	EXHAUST BAFFLE
32	900616	1	EXHAUST O-RING
33	403099	1	RETAINING RING
34	916232	1	SLEEVE
35	900728	1	PISTON ASSEMBLY
36	900680	1	PISTON BUMPER
37	018922	1	ACTUATOR ASSEMBLY
38	916201	1	RIGHT HANDLE
39	916229	1	FRONT CHANNEL
40	916231	1	RETAINING CUP
41	900708	2	SHC SCREW #8-32 X 3/8" (RED)
42	900754	1	SHC SCREW #8-32 X 3/8" (YELLOW)
43	916230	1	BRAD CHANNEL
44	916215	1	MAGAZINE PLATE
45	916205	1	BINDING CHANNEL
46	916220	1	LATCH COVER
47	900685	1	DOWEL PIN
48	902426	1	QUICK CLEAR LEVER ASSEMBLY
49	916204	1	FRONT PLATE
50	902425	1	PROBE TIP
51	916206	1	LOWER PROBE - WIRE FORM
52	916234	1	DOWEL PIN - NOSE
53	916203	1	BACK PLATE
54	900631	1	SPRING, LOCKOUT
55	900602	1	LOCKOUT BAR
56	900630	1	LOCKOUT PIN
57	918909	1	UTILITY HOOK CAP NUT
58	918910	1	UTILITY HOOK BUTTON
59	918911	1	UTILITY HOOK BLOCK
60	918913	1	SPRING, UTILITY HOOK
61	918906	1	UTILITY HOOK, WIRE FORM
62	904562	1	FAN MOTOR WIRE ASSEMBLY
63	904567	1	SPARK WIRE ASSEMBLY
64	900662	1	ESU POWER WIRE ASSEMBLY
65	916258	1	MSU
66	902621	1	BATTERY PAD
67	900726	1	SWITCH SLIDE ASSEMBLY
68	901082	1	TRIGGER ASSEMBLY
69	900629	1	CLIP/ HIGH TENSION
70	404702	2	SCREW #6-32 X 3/8"
71	902439	1	MOLDED CIRCUIT ASSEMBLY
72	916202	1	LEFT HANDLE
73	900679	1	FOLLOWER
74	900691	1	COMPRESSION SPRING
75	900720	1	FOLLOWER CORE
76	900722	1	FOLLOWER PIN
77	900627	1	NEGATOR SPRING
78	916218	1	FOLLOWER BODY
79	916287	1	SCREW, PLASTITE #8-16 X 5/8"
80	901066	4	SCREW, PLASTITE #8-16 X 3/4"
81	916262	1	UK/CE BRAND + NAMEPLATE + 2X PASLODE

ACCESSORIES

Car Adapter

Enables you to re-charge your battery with your vehicle's electrical system.

Part No. 900507

Battery Cell

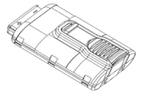

Part No. 018880

Battery Charger

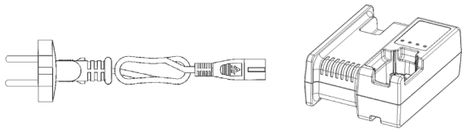

Part No. 018881 (EU)
Part No. 018882 (UK)

Cable

Part No. 018885 (EU)
Part No. 018886 (UK)

Special Panelling No-Mar Tip

Position the nailer for a 45 degree shot

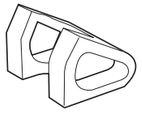

Part No. 018930

Hex Key 9/64"

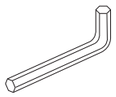

Part No. 900736

Paslode Intensive Tool Cleaner 300 ml

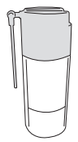

Part No. 115251

Carrying Case Standard

Part No. 014979

Notes