Oras Clinica

INSTALLATION AND MAINTENANCE GUIDE

4-5

6

7

8-11

12

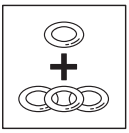

13

5526B

I (ISO 3822)
EN 817
50 - 1000 kPa
0.2 l/s (300 kPa)
80 kPa (0.1 l/s)
max. +80°C

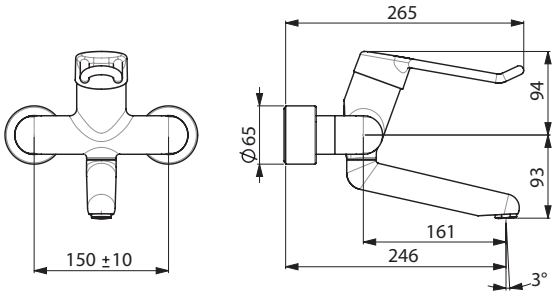

STF VTT-RTH-00064-17

5526A

I (ISO 3822)
EN 817
50 - 1000 kPa
0.2 l/s (300 kPa)
80 kPa (0.1 l/s)
max. +80°C

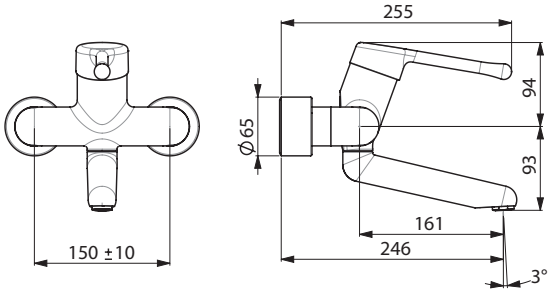

STF VTT-RTH-00064-17

5536B

I (ISO 3822)
EN 817
50 - 1000 kPa
0.2 l/s (300 kPa)
80 kPa (0.1 l/s)
max. +80°C

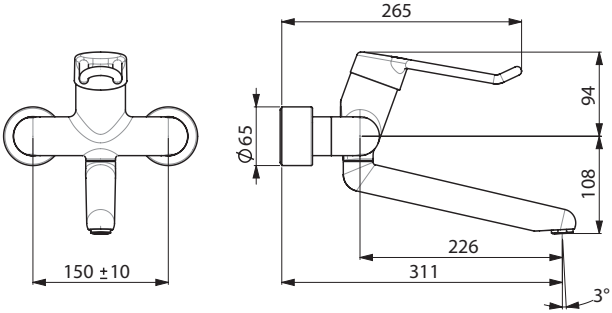

STF VTT-RTH-00064-17

5536A

I (ISO 3822)
EN 817
50 - 1000 kPa
0.2 l/s (300 kPa)
80 kPa (0.1 l/s)
max. +80°C

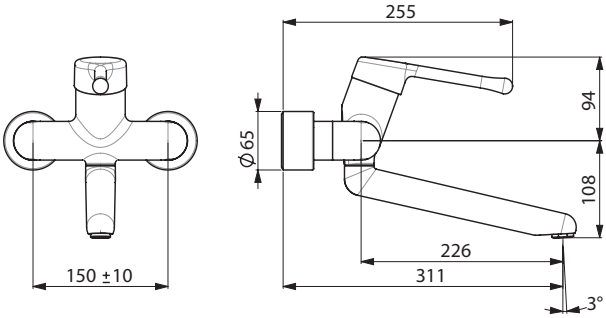

STF VTT-RTH-00064-17

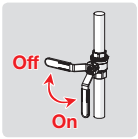

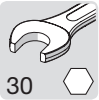

②

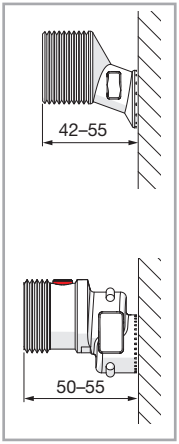

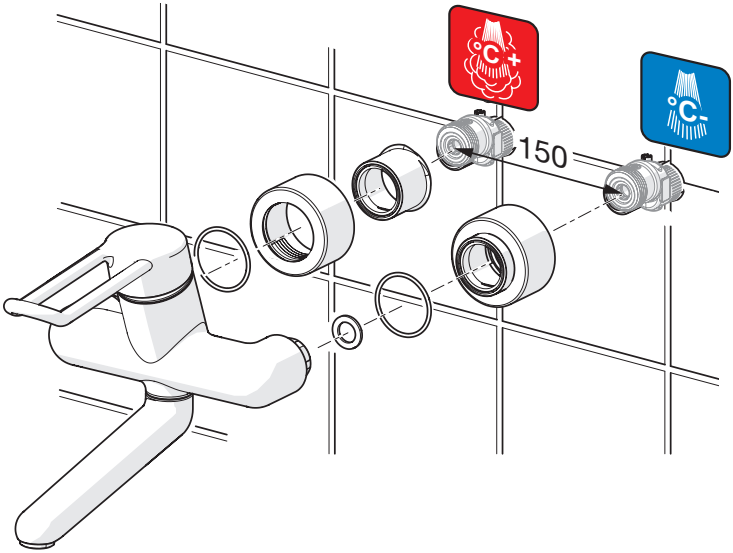

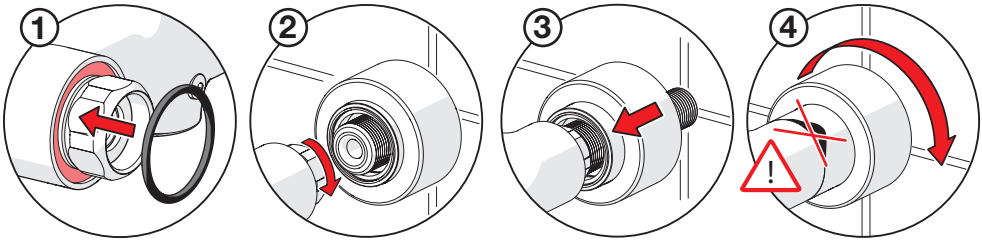

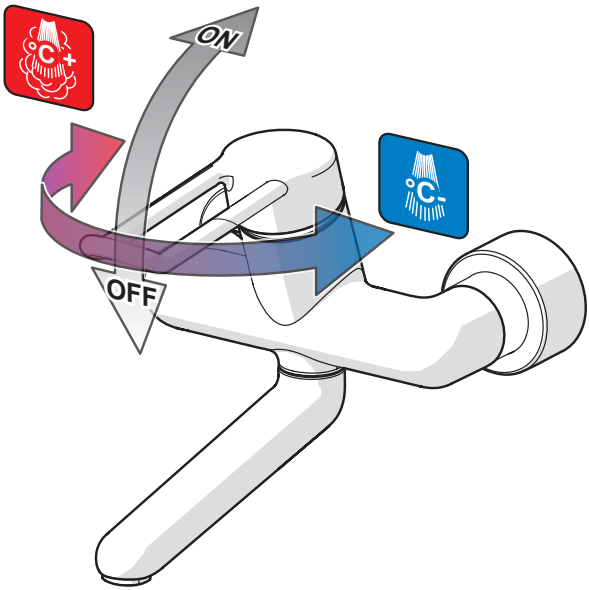
ON
OFF

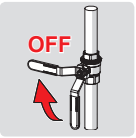

①

②

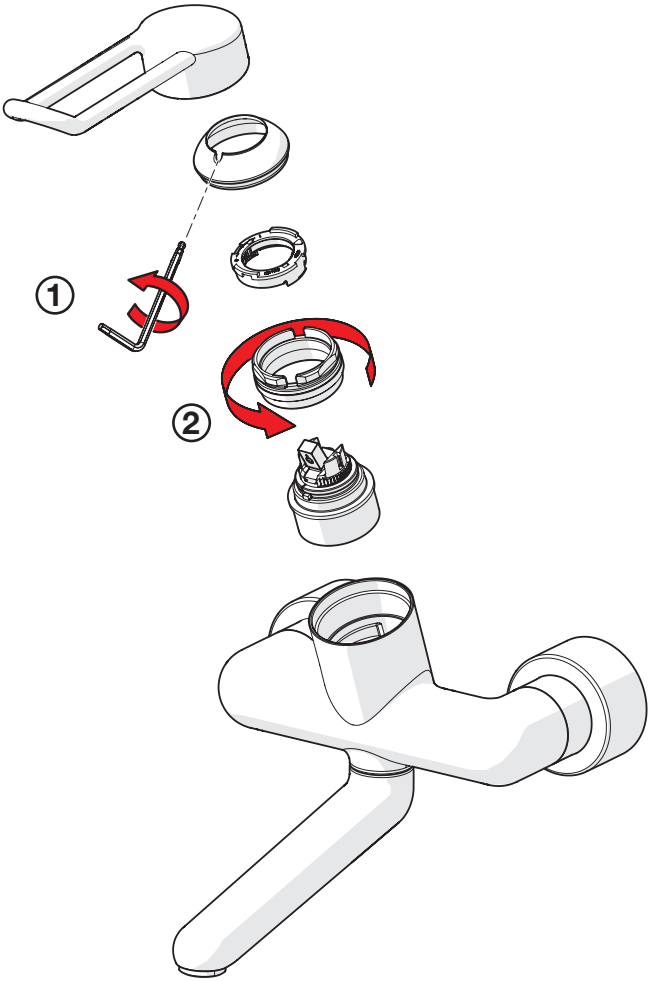

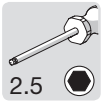

①

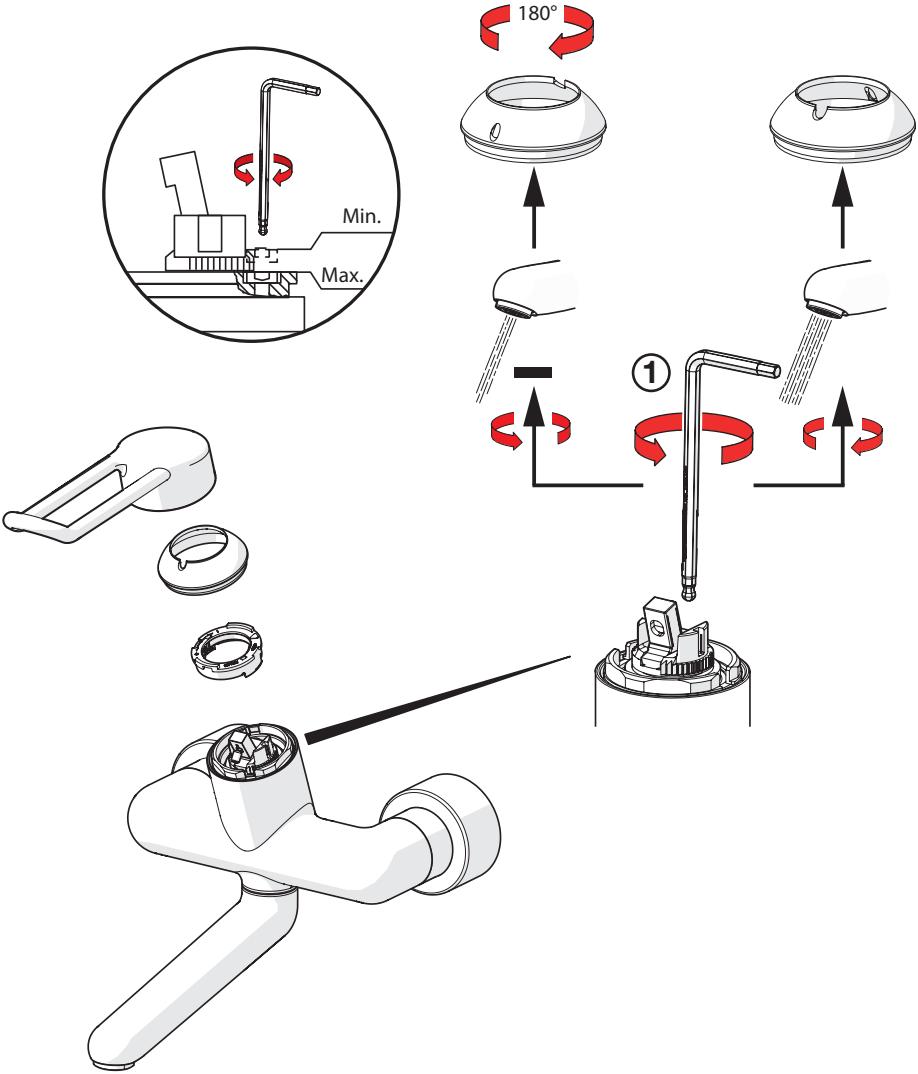

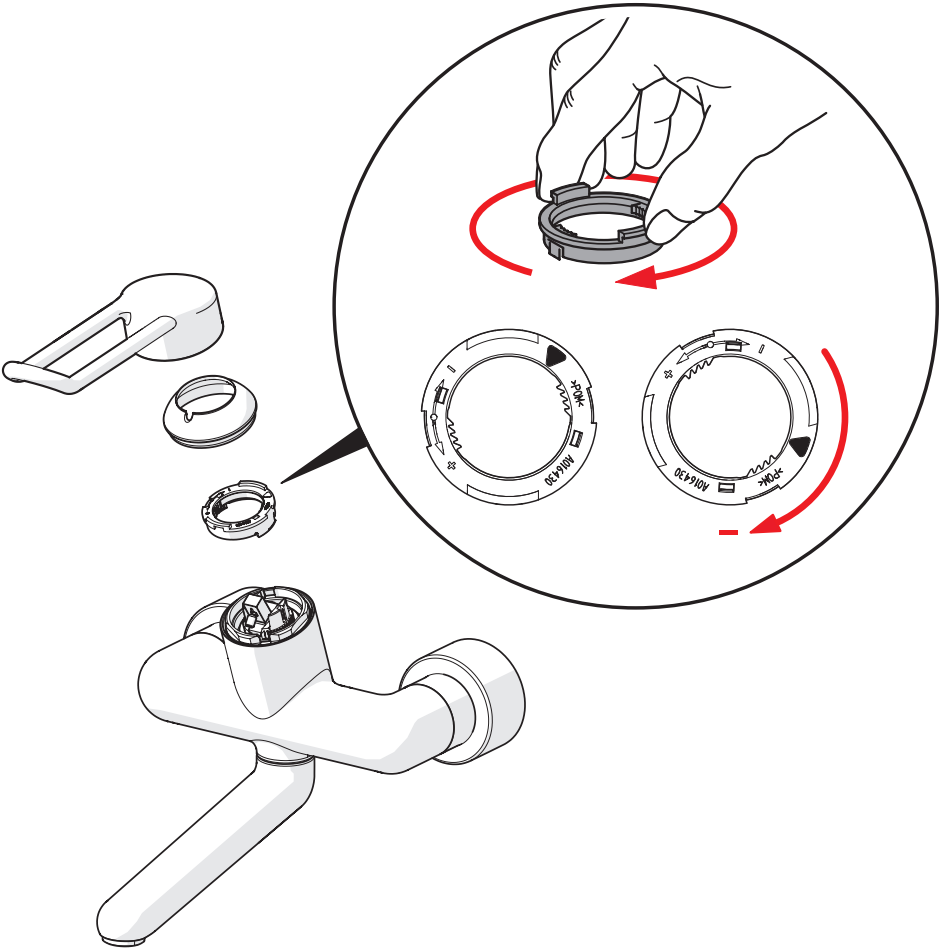
A016430
A016430

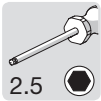

①

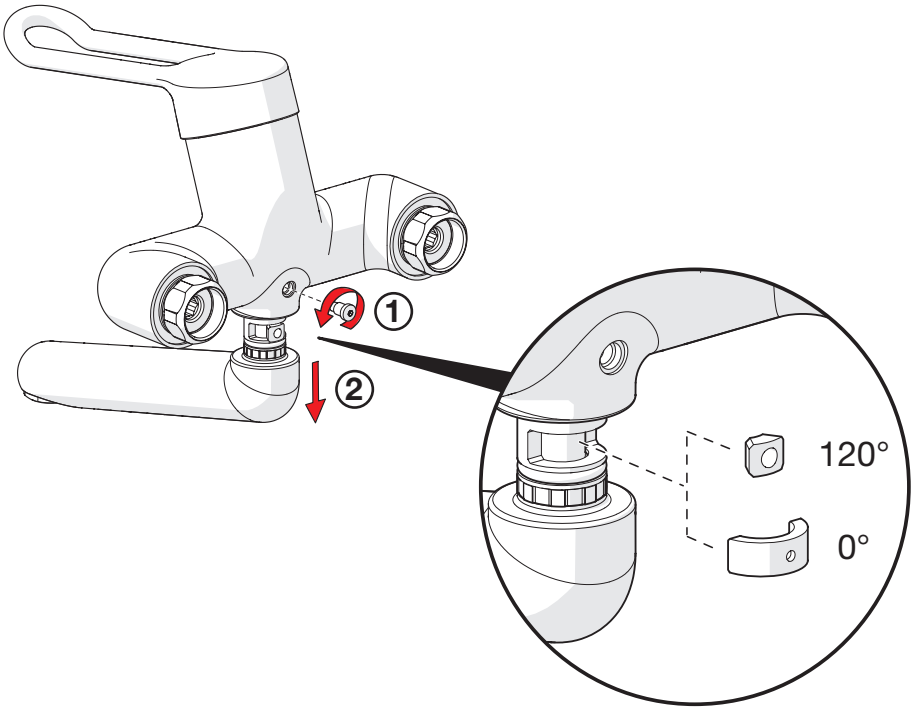

①

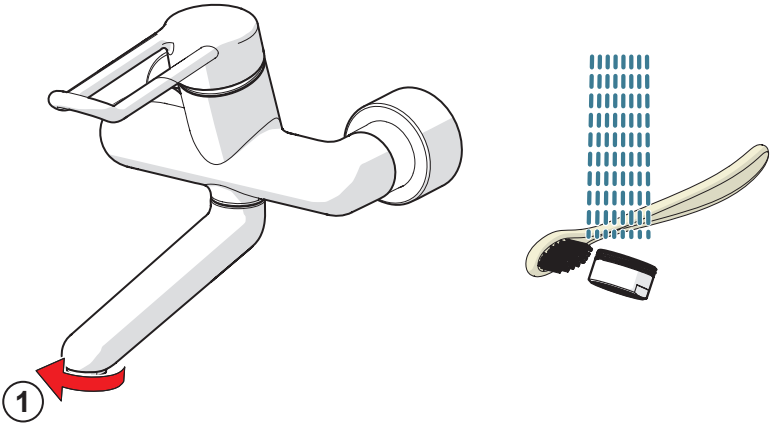

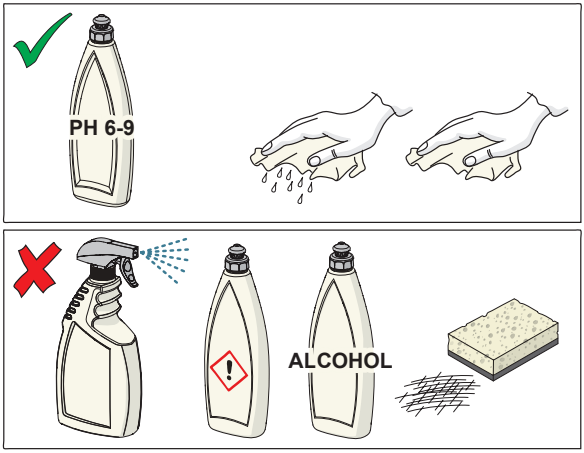

CLEANING.ORAS.COM

5526B , 5536B , 5562A , 5536A

1 602275V
2 602276V
3 602277V
4 602278V
5 602281V
6 602280V
7 602285V
8 602286/10
9 602283V
10 602284/2
11 602287V
12 602288V

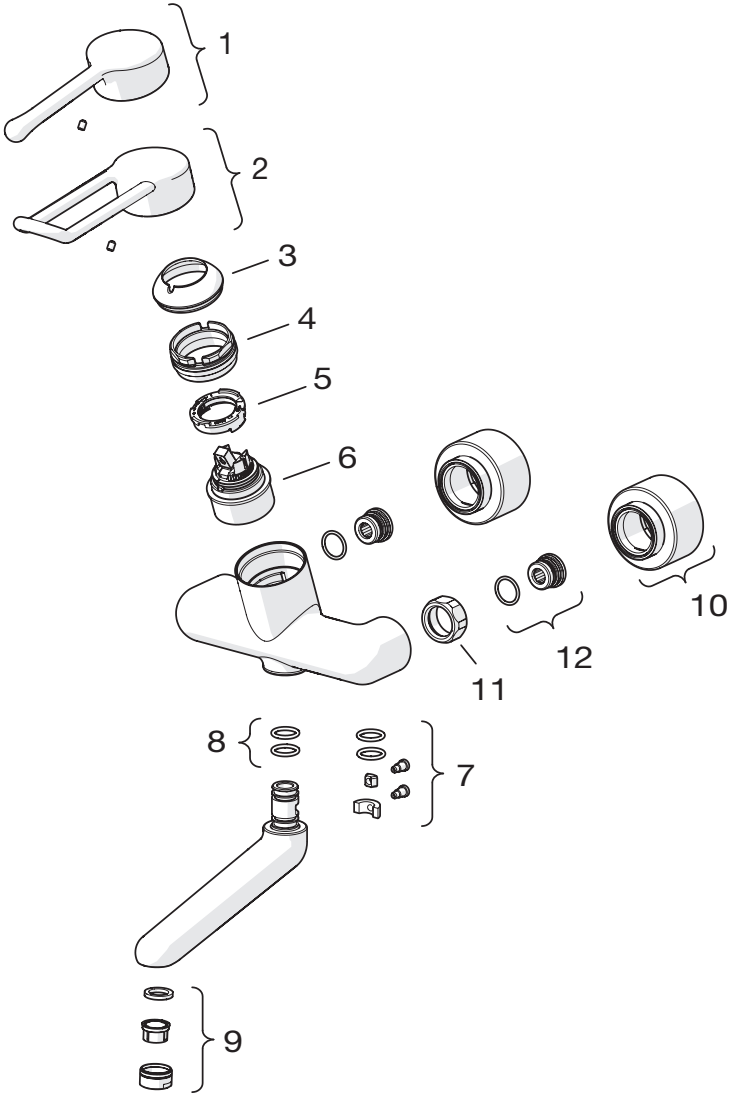

Oras Group is a powerful European provider of sanitary fittings: the market leader in the Nordics and a leading company in Continental Europe. The company's mission is to make the use of water easy and sustainable and its vision is to become the European leader of advanced sanitary fittings. Oras Group has two strong brands, Oras and Hansa.

The head office of the Group is located in Rauma, Finland, and the Group has three manufacturing sites: Kralovice (Czech Republic), Olesno (Poland) and Rauma (Finland). Oras Group employs approximately 1400 people in twenty countries. Oras Group is owned by Oras Invest, a family company and an industrial owner.

ORAS GROUP
Isometsäntie 2, P.O. Box 40
FI-26101 Rauma
Tel. +358 2 83 161
Fax +358 2 831 6300
info.finland@oras.com
www.oras.com

943185-01-20